SCHARER PLAN Kft.
H-1113 Budapest,
Bartók Béla út 152.
Telefon HU +36 (30) 258 5604

KELER STUDIO
1194 Budapest
Temesvár u. 13
www.kelerstudio.hu

Pomáz, HRSZ 3677/1
HÁSZ Kft.
Asztalosüzem és Irodaépület
Statikai dokumentáció – Vasbeton szerkezetek
2017.10

Tartalom

1. Záróföldém és gerendák ... 4
   1.1. Geometria ... 4
   1.2. Anyagok ... 4
   1.3. Felületek ... 4
   1.4. Szelvények ... 4
   1.5. Terhek és hatások ... 5
   1.6. Teherkombinációk ... 5
   1.7. Felületi igénybevételek ... 6
   1.8. Felületi alakváltozások ... 8
   1.9. Záróföldém vasalása ... 9
   1.10. Záróföldém átszúródási vizsgálata ... 14
   1.11. Rudak igénybevételei ... 16
   1.12. Rudak alakváltozása ... 18
   1.13. Gerendák vasalása ... 19
2. Közbenső födém ... 20
   2.1. Geometria ... 20
   2.2. Anyagok ... 20
   2.3. Felületek ... 20
   2.4. Terhek és hatások ... 21
   2.5. Teherkombinációk ... 21
   2.6. Felületi igénybevételek ... 22
   2.7. Felületi alakváltozások ... 24
   2.8. Közbenső födém vasalása ... 25
   2.9. Közbenső födém átszúródási vizsgálata ... 30
3. Lemezalap, pillérek és falak ... 32
   3.1. Geometria ... 32
   3.2. Anyagok ... 33
   3.3. Felületek ... 33
   3.4. Szelvények ... 34
   3.5. Terhek és hatások ... 34
   3.6. Teherkombinációk ... 35
   3.7. Felületi igénybevételek – Lemezalap ... 36
   3.8. Lemezalap vasalása ... 39
   3.9. Lemezalap átszúródási vizsgálata ... 42
   3.10. Felületi igénybevételek - Falak ... 44

3.11. Vasbeton fal vasalása 47
3.12. Támfal vasalása 50
3.13. Zsalukőfal vasalása 53
3.14. Rudak igénybevételei 56
3.15. Pillérek vasalása 58

1. Záróföldém és gerendák

1.1. Geometria

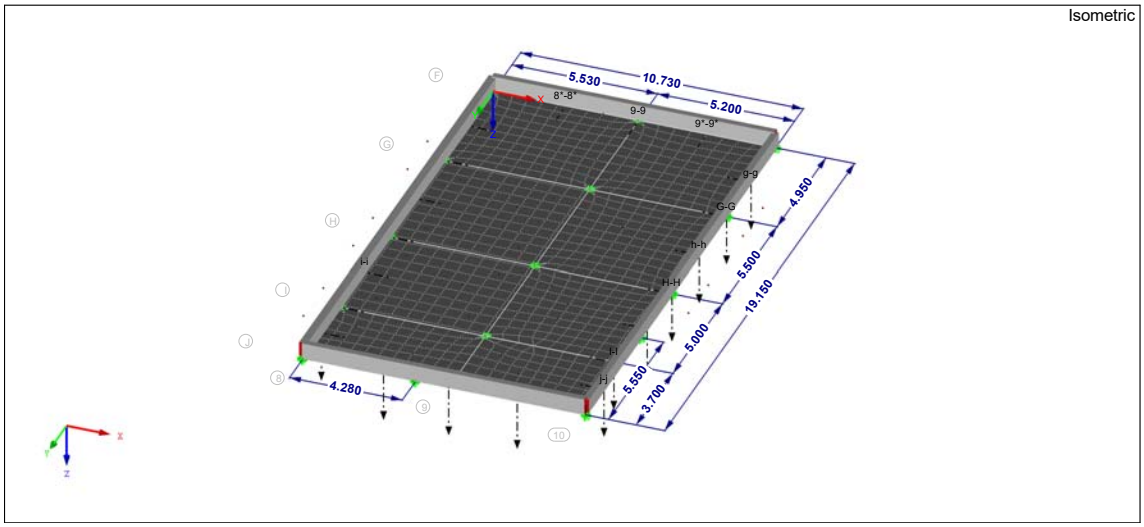

1.2. Anyagok

Material No.	Material Description	Modulus of Elasticity E [kN/cm²]	Shear Modulus G [kN/cm²]	Poisson's Ratio ν [-]	Specific Weight γ [kN/m³]	Coeff. of Th. Exp. α [1/°C]
1	Concrete C30/37 | EN 1992-1-1:2004/A1:2014	3300,00	1375,00	0,200	25,00	1,00E-05

1.3. Felületek

Surface No.	Surface Type Geometry	Surface Type Stiffness	Boundary Lines No.	Material No.	Thickness Type	Thickness d [mm]	Eccentricity e_z [mm]
1	Plane	Standard	19,7,15,9	1	Constant	220,0	0,0
2	Plane	Standard	5,16,7,20	1	Constant	220,0	0,0
3	Plane	Standard	3,17,5,21	1	Constant	220,0	0,0
4	Plane	Standard	1,24,18,3,22	1	Constant	220,0	0,0
5	Plane	Standard	2,14,4,18	1	Constant	220,0	0,0
6	Plane	Standard	4,23,13,6,17	1	Constant	220,0	0,0
7	Plane	Standard	6,12,8,16	1	Constant	220,0	0,0
8	Plane	Standard	8,11,10,15	1	Constant	220,0	0,0

1.4. Szelvények

Section No.	Cross-Section Description [mm]	Material No.	Moments of inertia [cm⁴] Torsion J	Bending I_y	Bending I_z	Cross-Sectional Areas [cm²] Axial A	Shear A_y	Shear A_z
1	Rectangle 250/550	1	204716,12	346614,60	71614,59	1375,00	1145,83	1145,83
2	Rectangle 300/550	1	326142,80	415937,54	123750,00	1650,00	1375,00	1375,00
3	Rectangle 250/600	1	230672,83	450000,03	78125,00	1500,00	1250,00	1250,00

1.5. Terhek és hatások

Load Case	Load Case Description	To Solve	EN 1990 | CEN Action Category	Self-Weight - Factor in Direction Active	X	Y	Z
LC1	Önsúly	+	Permanent	+	0,000	0,000	1,000
LC2	Állandó	+	Permanent/Imposed	-	0,000	0,000	0,000
LC3	Hasznos teher - Totális	+	Imposed - Category H: roofs	-	0,000	0,000	0,000
LC4	Hasznos teher - max. mezonyomaték 1	+	Imposed - Category H: roofs	-	0,000	0,000	0,000
LC5	Hasznos teher - max. mezonyomaték 2	+	Imposed - Category H: roofs	-	0,000	0,000	0,000
LC6	Hasznos teher - max. támasznyomaték	+	Imposed - Category H: roofs	-	0,000	0,000	0,000
LC7	Hó	+	Snow (H ≤ 1000 m a.s.l.)	-	0,000	0,000	0,000
LC8	Szél +	+	Wind	-	0,000	0,000	0,000
LC9	Szél -	+	Wind	-	0,000	0,000	0,000

1.6. Teherkombinációk

Combin. Express.	Combination Expression Description	Use	EN 1990 | CEN Design Situation	Generated Action Combinations
CE1	ULS	+	ULS (STR/GEO) - Permanent / transient - Eq. 6.10	AC1 ... AC16 (16/60)
CE2	SLS	+	SLS - Characteristic	AC17 ... AC32 (16/60)
CE3	SLS	+	SLS - Frequent	AC33 ... AC48 (16/60)
CE4	SLS	+	SLS - Quasi-permanent	AC49 ... AC60 (12/60)

1.7. Felületi igénybevételek

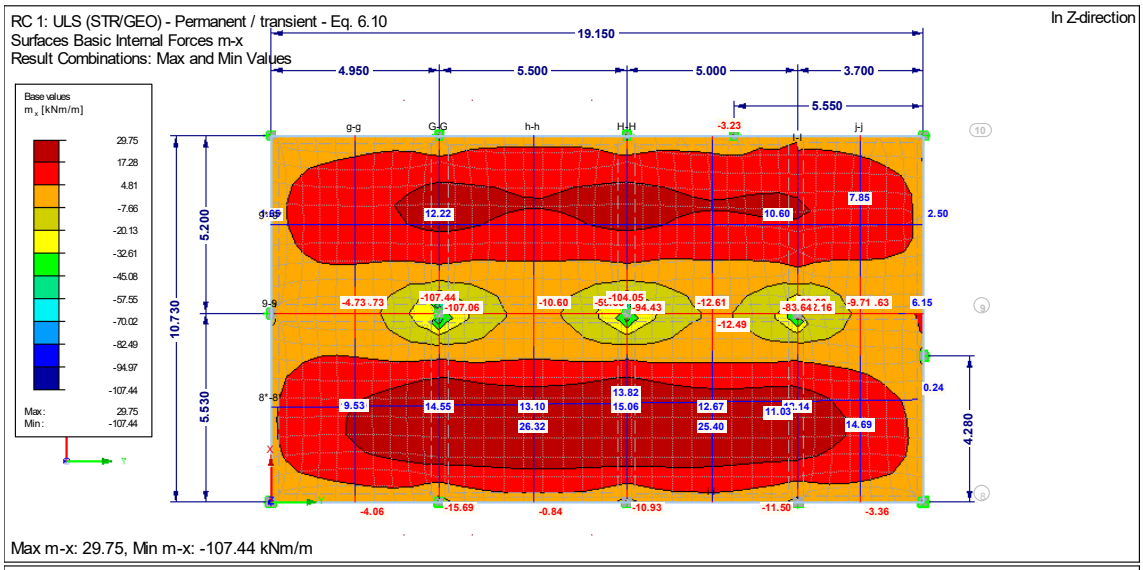

Max m-x: 29.75, Min m-x: -107.44 kNm/m

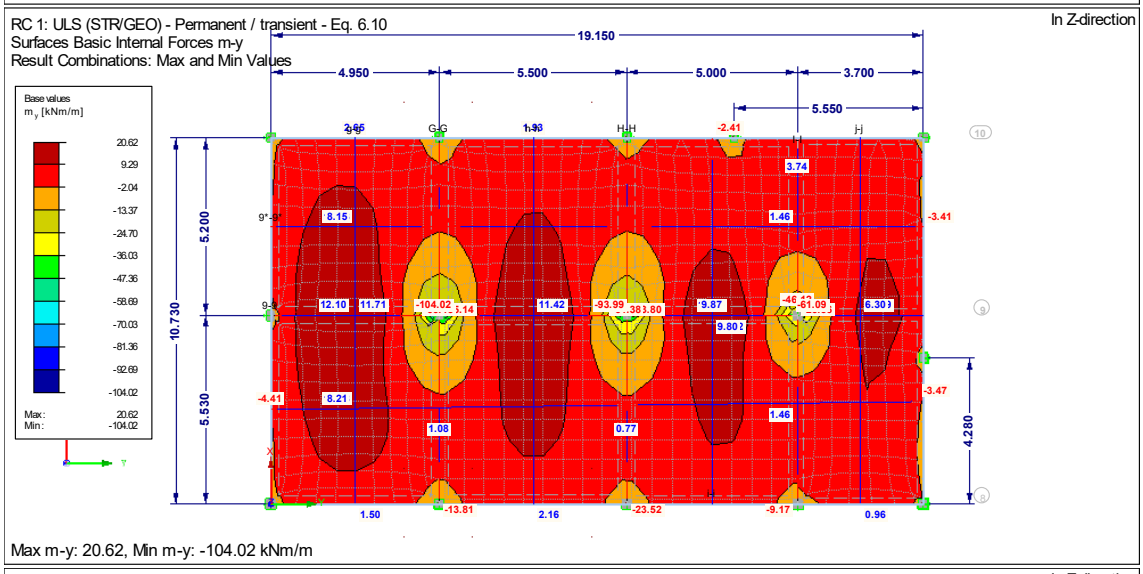

Max m-y: 20.62, Min m-y: -104.02 kNm/m

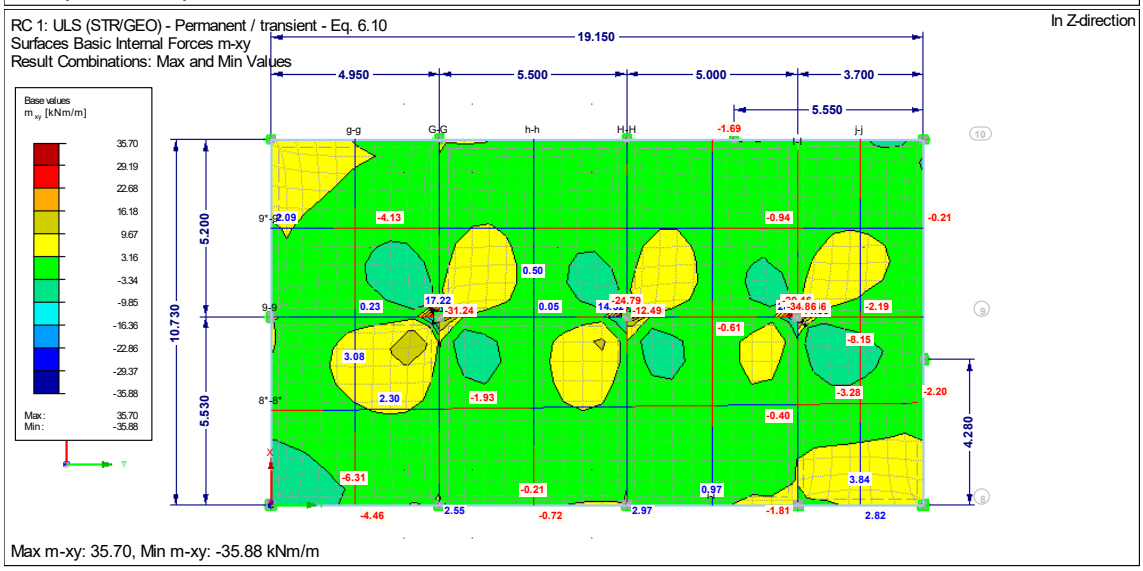

Max m-xy: 35.70, Min m-xy: -35.88 kNm/m

RC 1: ULS (STR/GEO) - Permanent / transient - Eq. 6.10
Surfaces Basic Internal Forces v-x
Result Combinations: Max and Min Values

In Z-direction

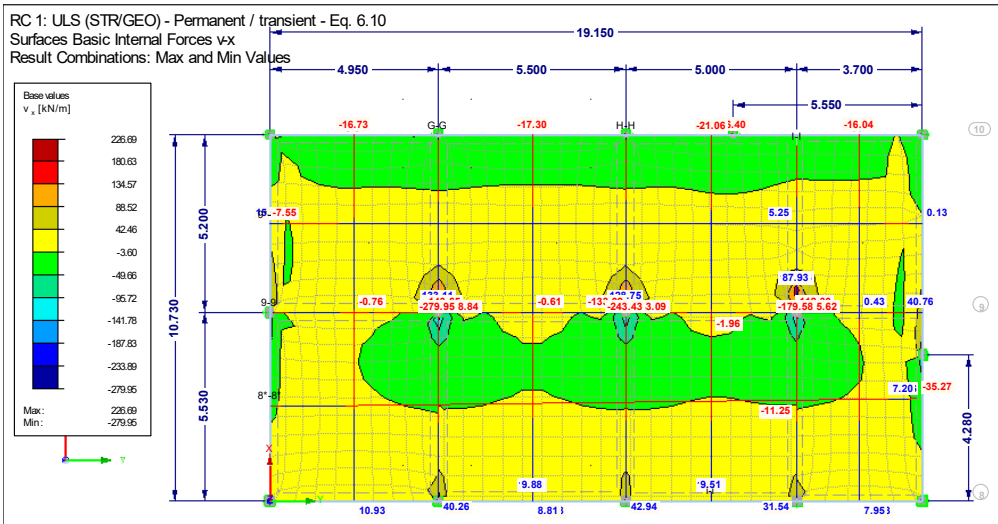

Max v-x: 226.69, Min v-x: -279.95 kN/m

RC 1: ULS (STR/GEO) - Permanent / transient - Eq. 6.10
Surfaces Basic Internal Forces v-y
Result Combinations: Max and Min Values

In Z-direction

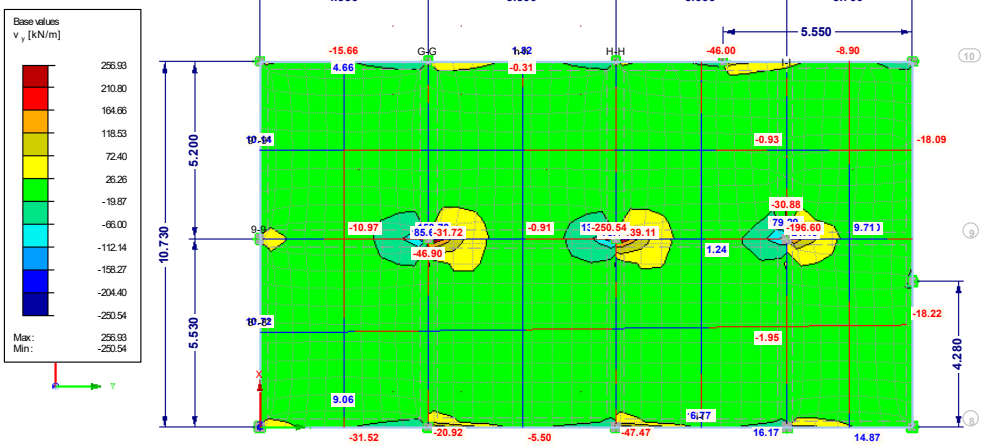

Max v-y: 256.93, Min v-y: -250.54 kN/m

RC 1: ULS (STR/GEO) - Permanent / transient - Eq. 6.10
Surfaces Basic Internal Forces n-x
Result Combinations: Max and Min Values

In Z-direction

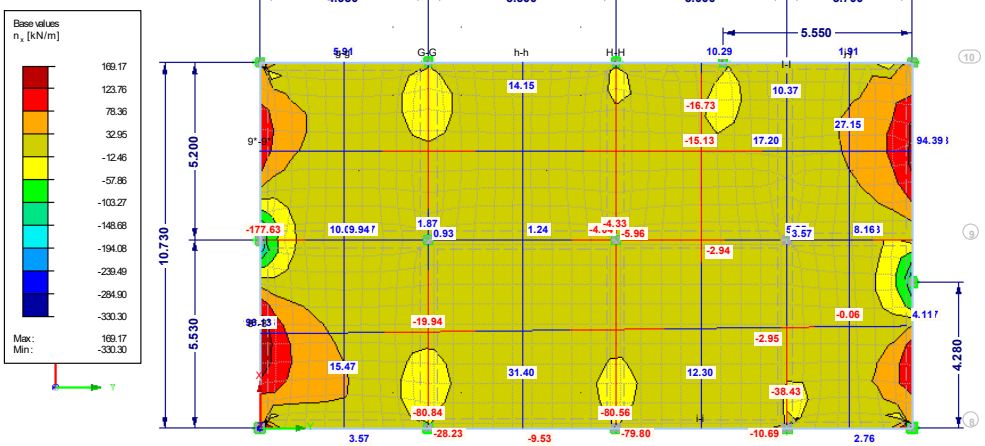

Max n-x: 169.17, Min n-x: -330.30 kN/m

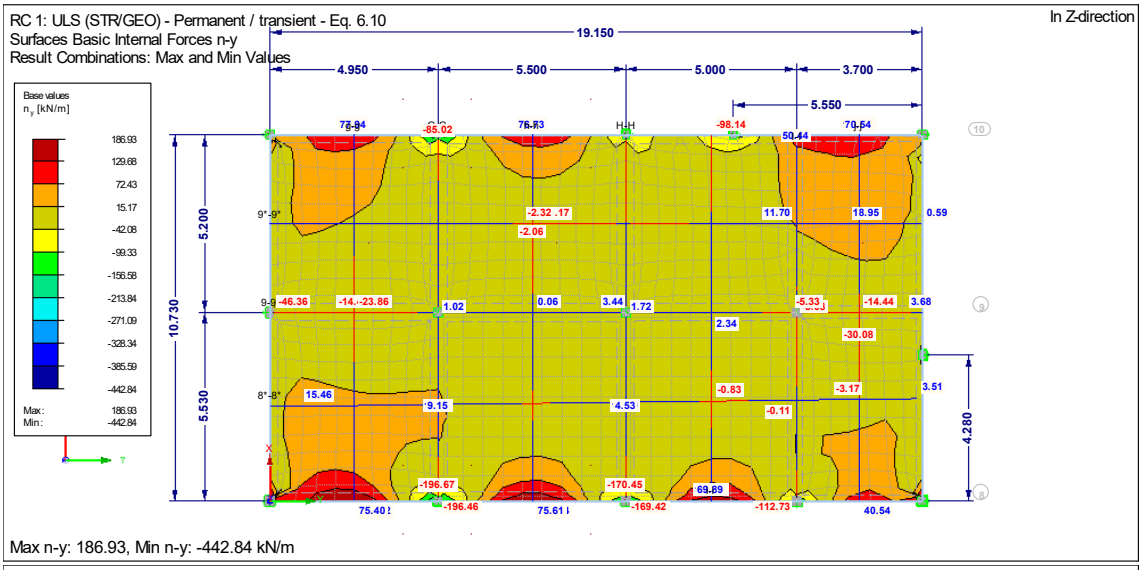

Max n-y: 186.93, Min n-y: -442.84 kN/m

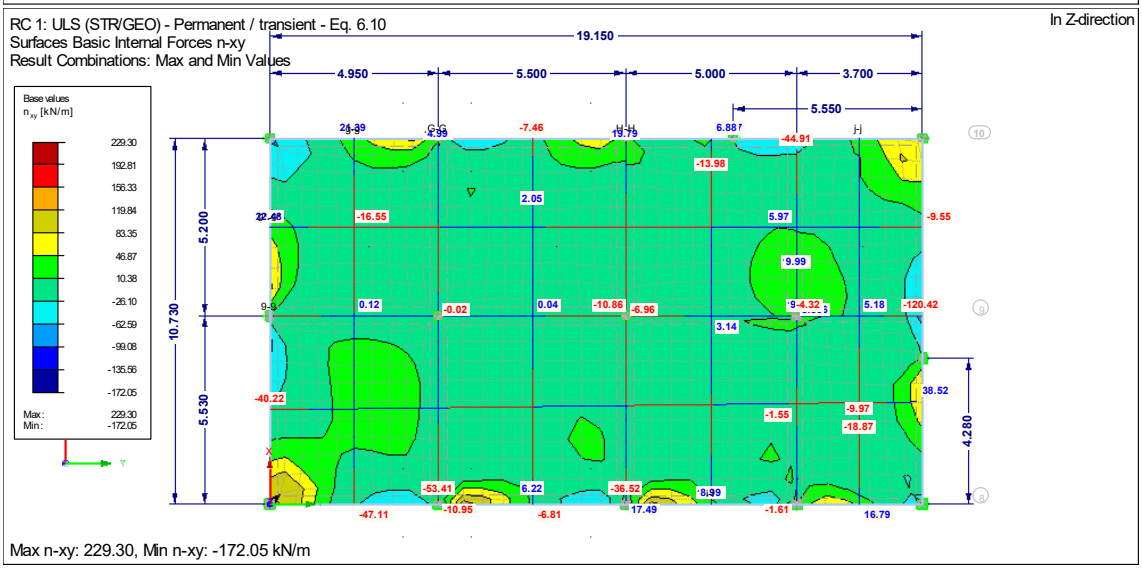

Max n-xy: 229.30, Min n-xy: -172.05 kN/m

1.8. Felületi alakváltozások

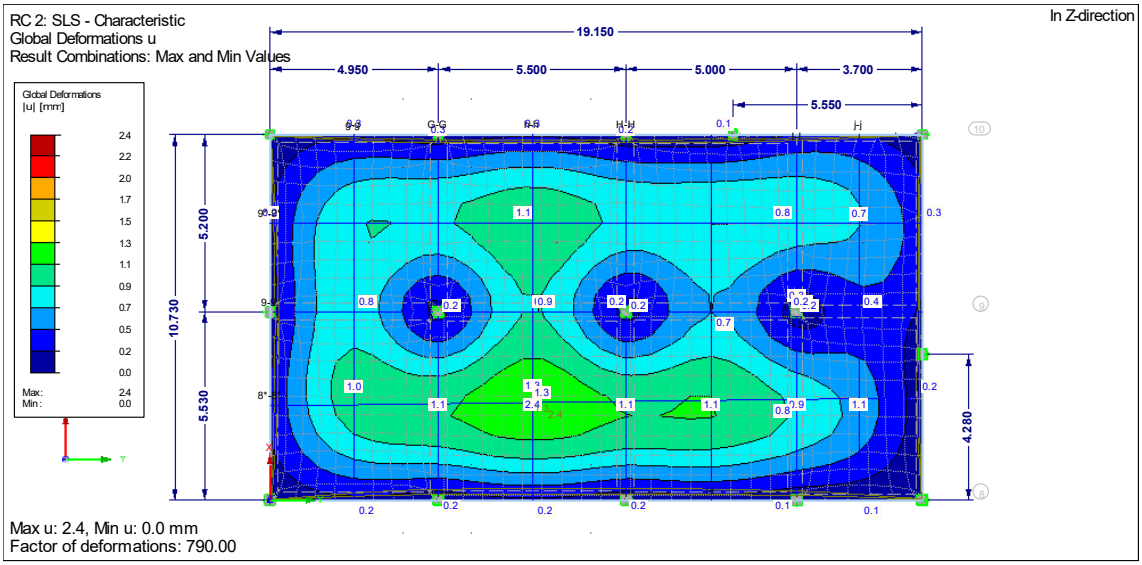

Max u: 2.4, Min u: 0.0 mm
Factor of deformations: 790.00

1.9. Záróföldém vasalása

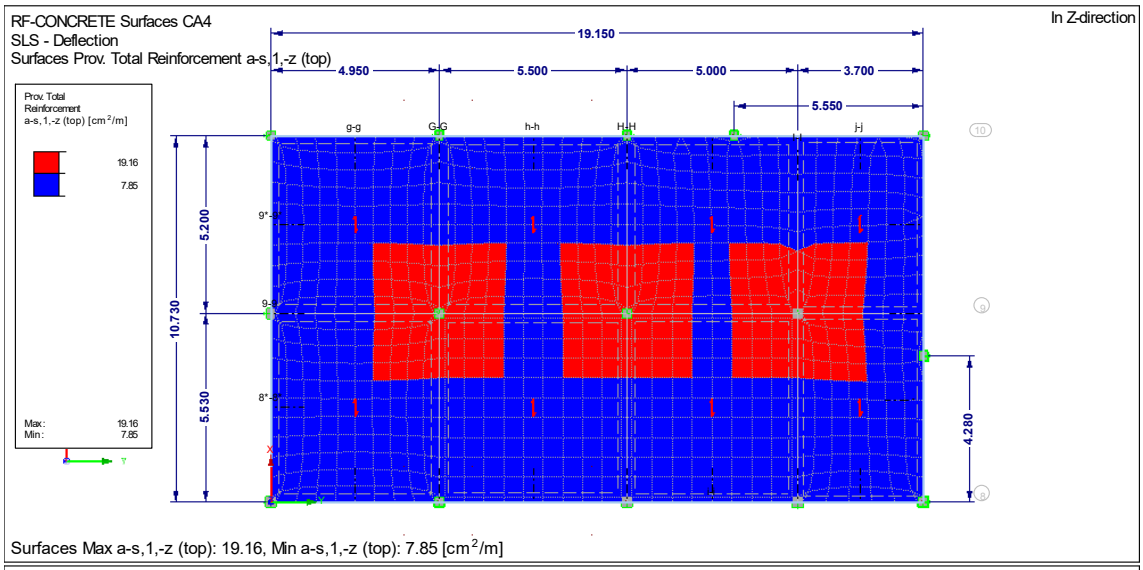

Surfaces Max a-s,1,-z (top): 19.16, Min a-s,1,-z (top): 7.85 [cm²/m]

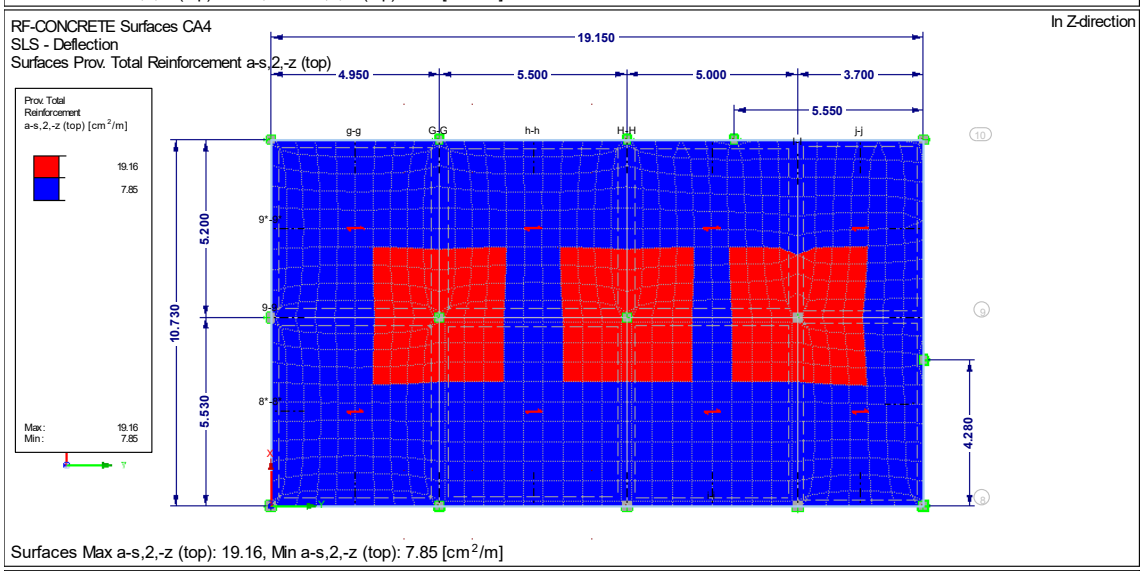

Surfaces Max a-s,2,-z (top): 19.16, Min a-s,2,-z (top): 7.85 [cm²/m]

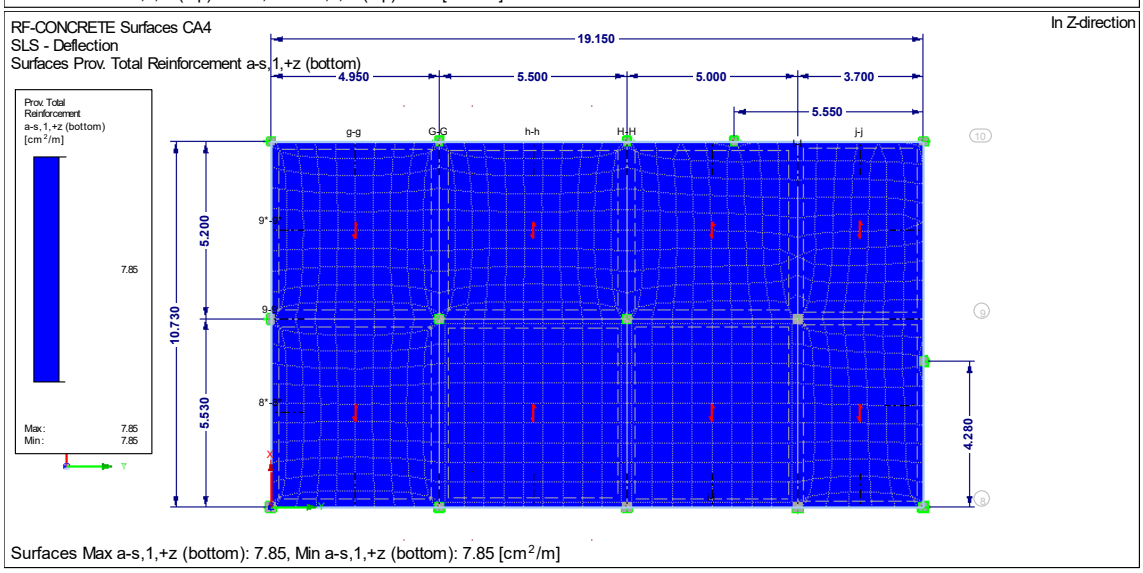

Surfaces Max a-s,1,+z (bottom): 7.85, Min a-s,1,+z (bottom): 7.85 [cm²/m]

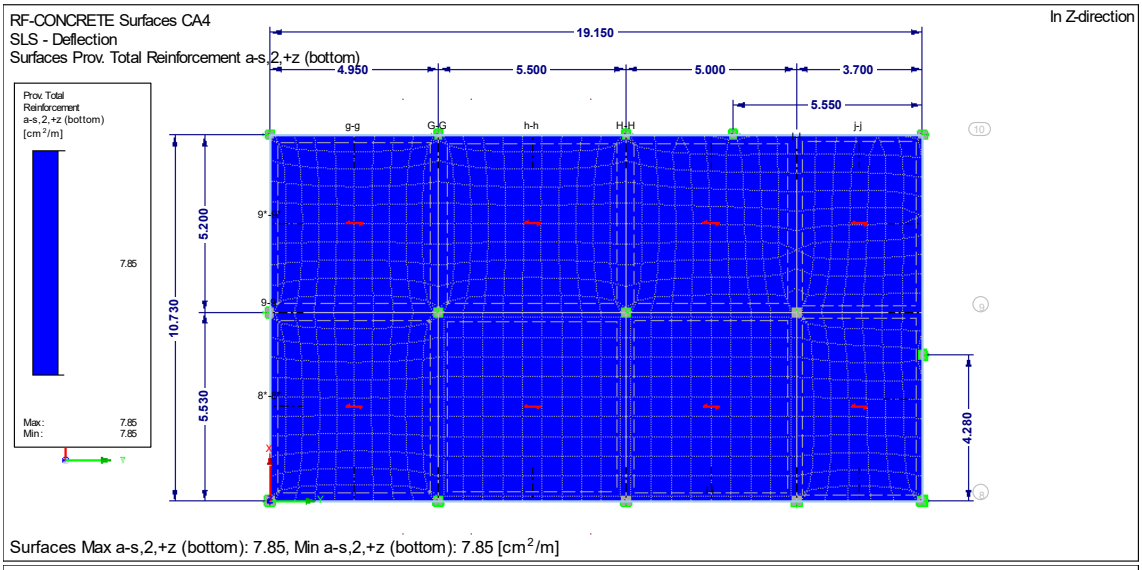

Surfaces Max a-s,2,+z (bottom): 7.85, Min a-s,2,+z (bottom): 7.85 [cm^2/m]

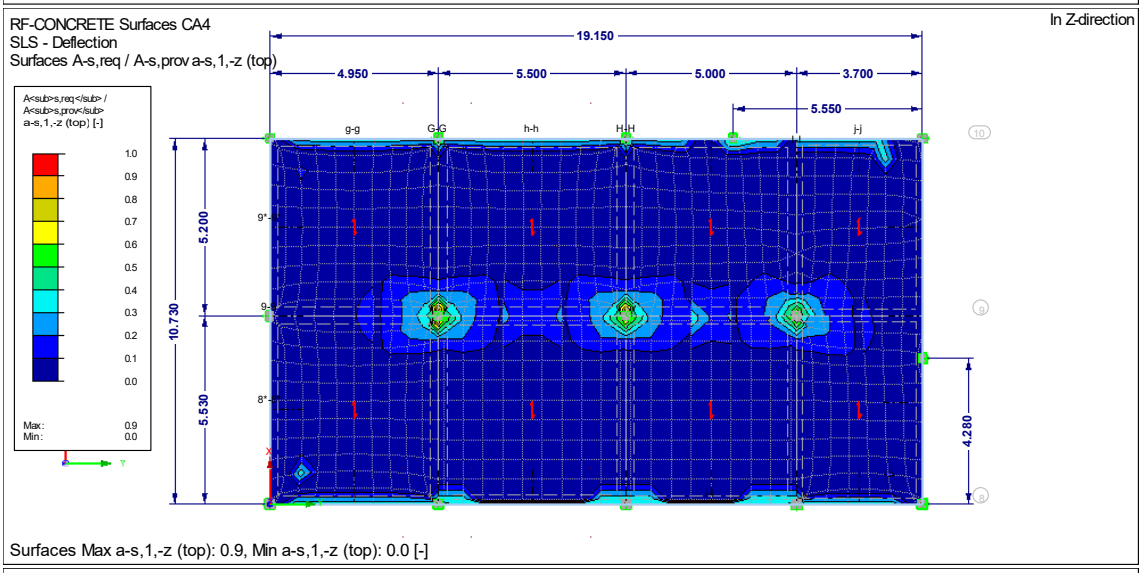

Surfaces Max a-s,1,-z (top): 0.9, Min a-s,1,-z (top): 0.0 [-]

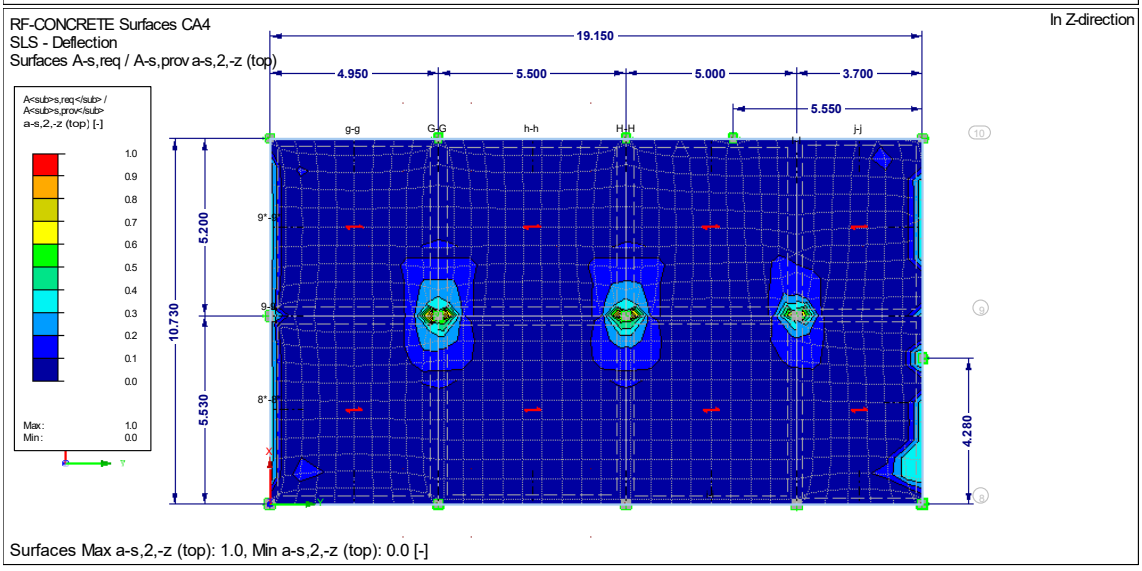

Surfaces Max a-s,2,-z (top): 1.0, Min a-s,2,-z (top): 0.0 [-]

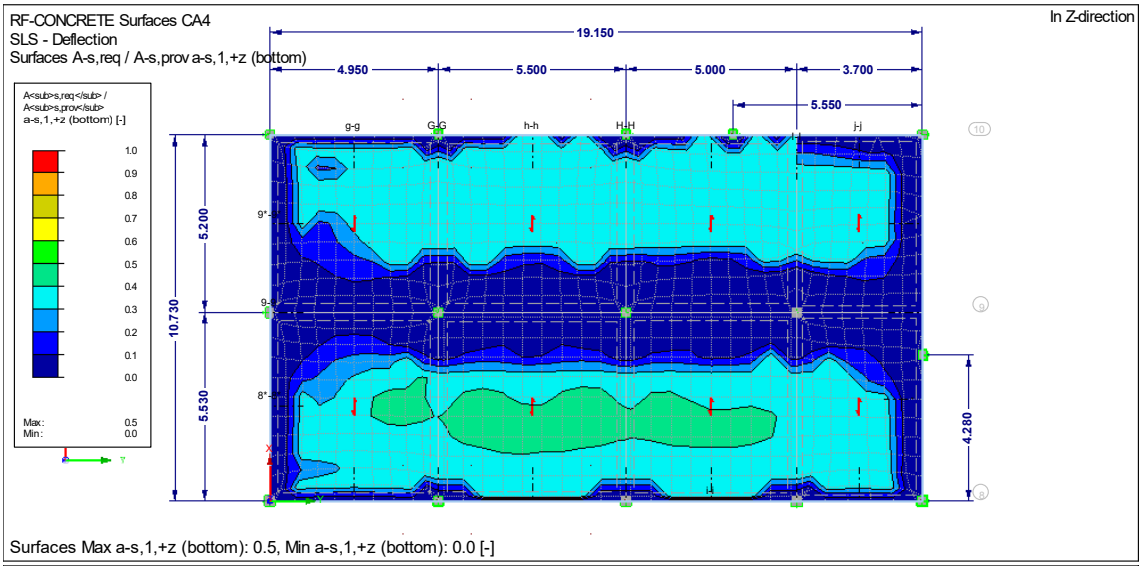

Surfaces Max a-s,1,+z (bottom): 0.5, Min a-s,1,+z (bottom): 0.0 [-]

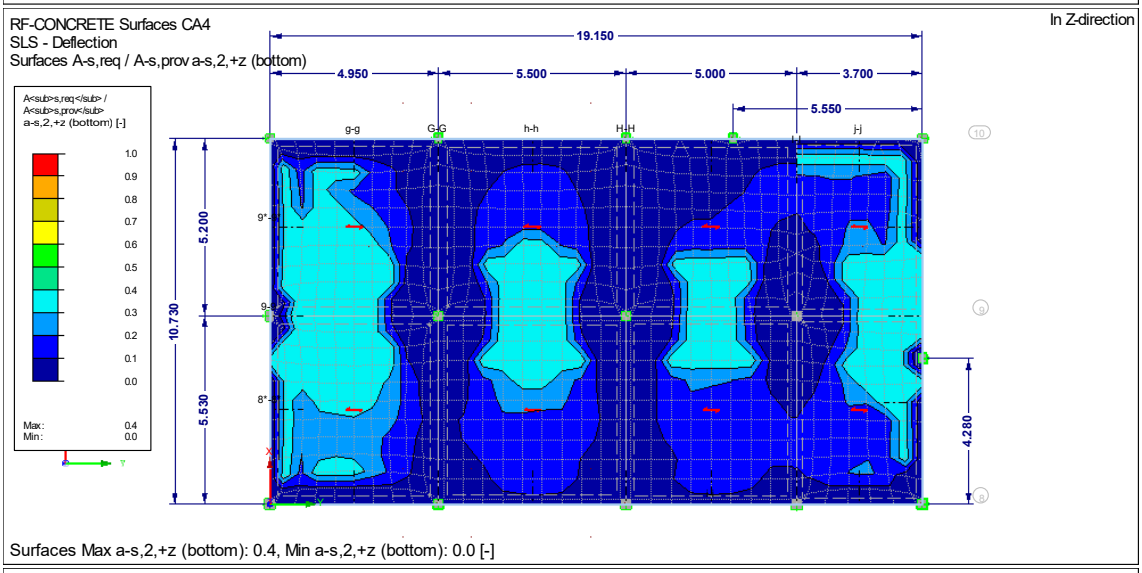

Surfaces Max a-s,2,+z (bottom): 0.4, Min a-s,2,+z (bottom): 0.0 [-]

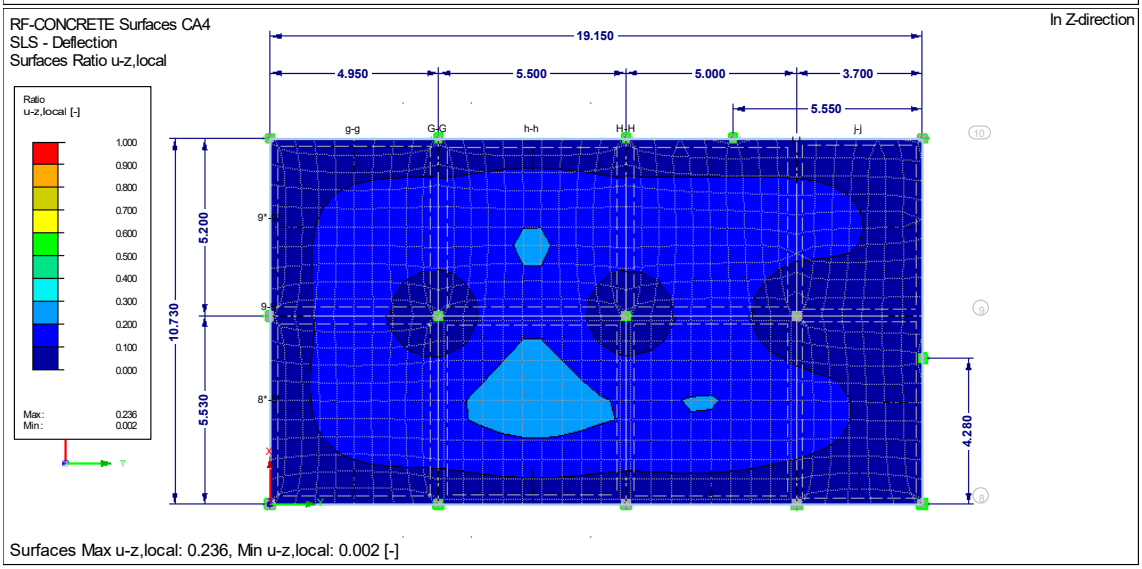

Surfaces Max u-z,local: 0.236, Min u-z,local: 0.002 [-]

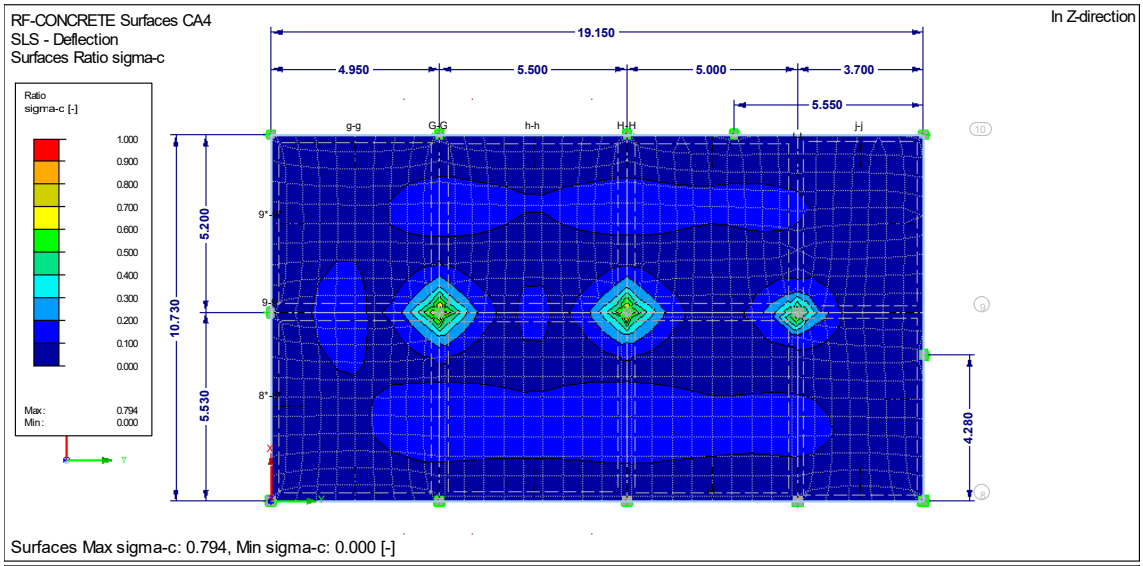

Surfaces Max sigma-c: 0.794, Min sigma-c: 0.000 [-]

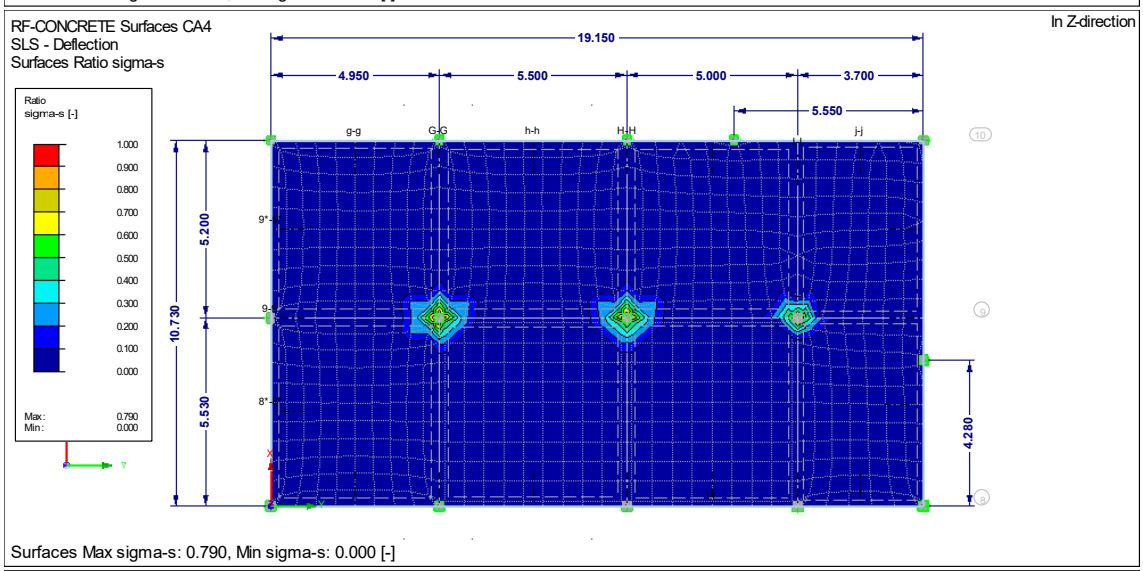

Surfaces Max sigma-s: 0.790, Min sigma-s: 0.000 [-]

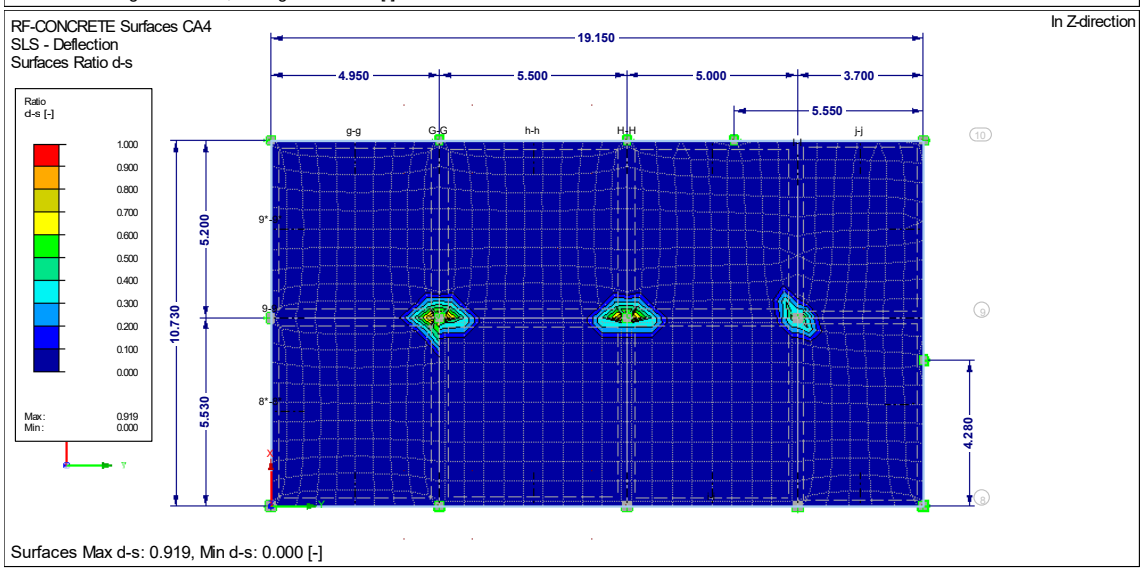

Surfaces Max d-s: 0.919, Min d-s: 0.000 [-]

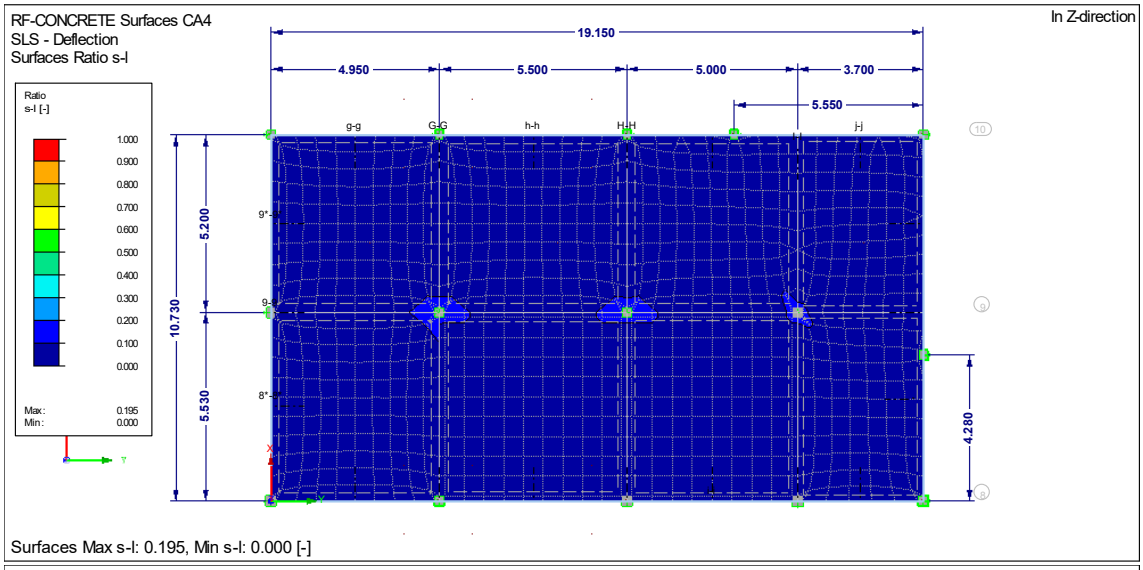

Surfaces Max s-l: 0.195, Min s-l: 0.000 [-]

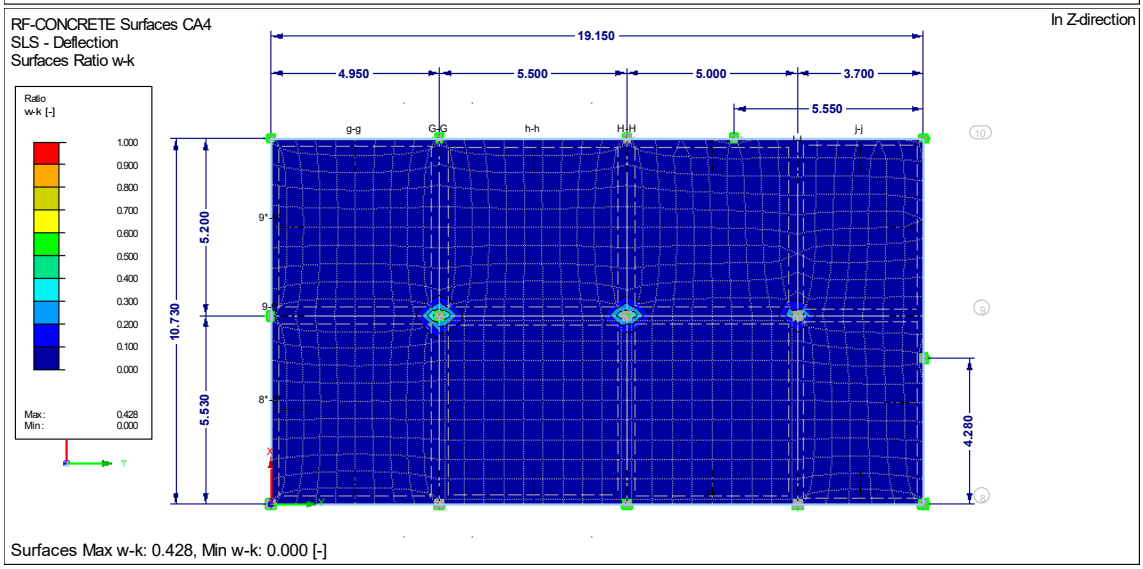

Surfaces Max w-k: 0.428, Min w-k: 0.000 [-]

1.10. Zárófödém átszúródási vizsgálata

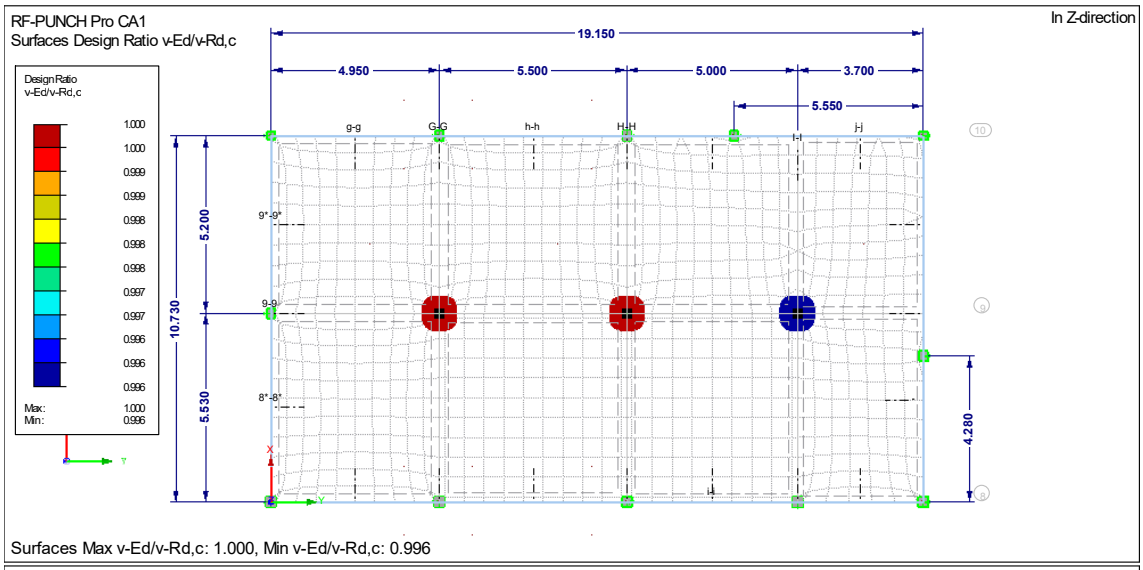

Surfaces Max v-Ed/v-Rd,c: 1.000, Min v-Ed/v-Rd,c: 0.996

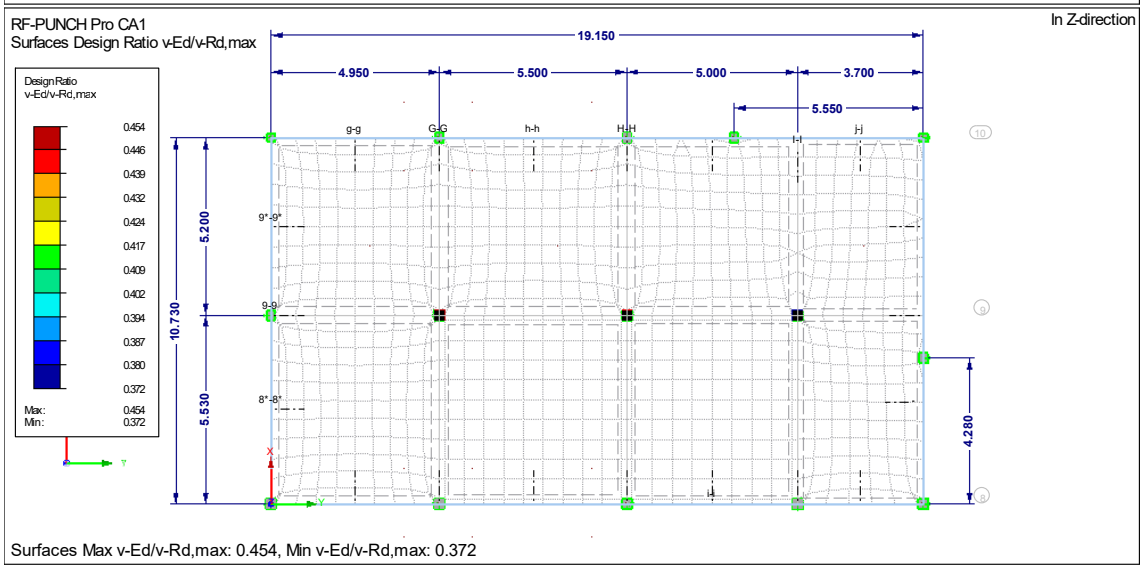

Surfaces Max v-Ed/v-Rd,max: 0.454, Min v-Ed/v-Rd,max: 0.372

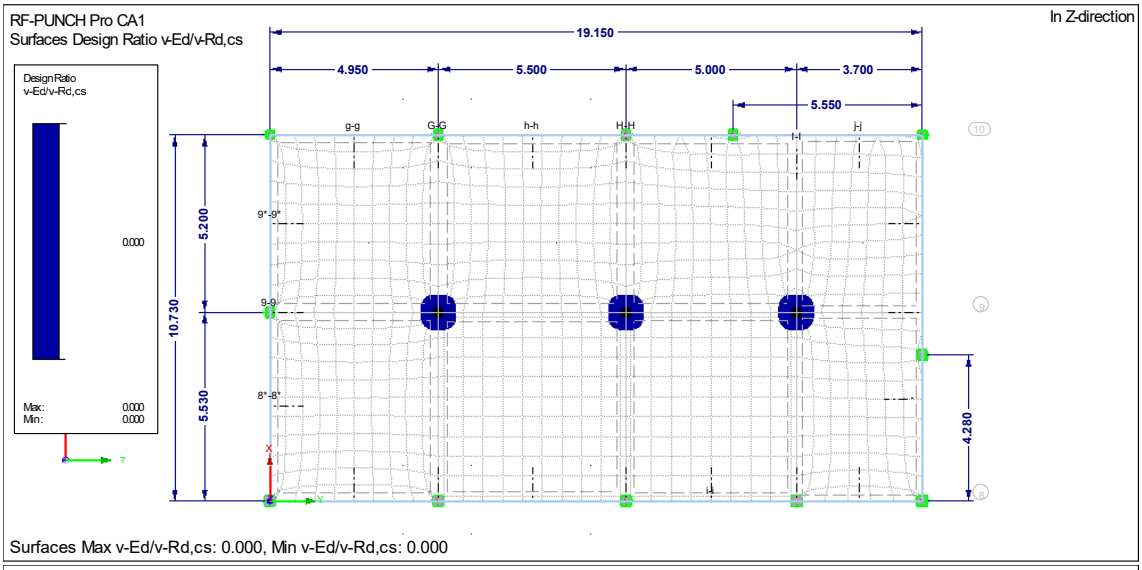

Surfaces Max v-Ed/v-Rd,cs: 0.000, Min v-Ed/v-Rd,cs: 0.000

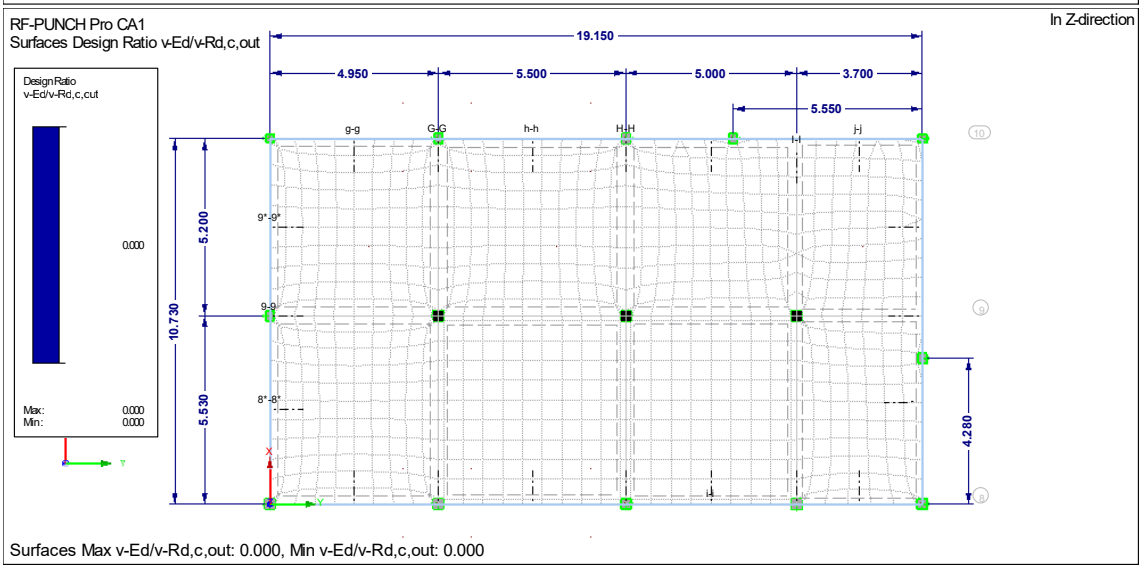

Surfaces Max v-Ed/v-Rd,c,out: 0.000, Min v-Ed/v-Rd,c,out: 0.000

1.11. Rudak igénybevételei

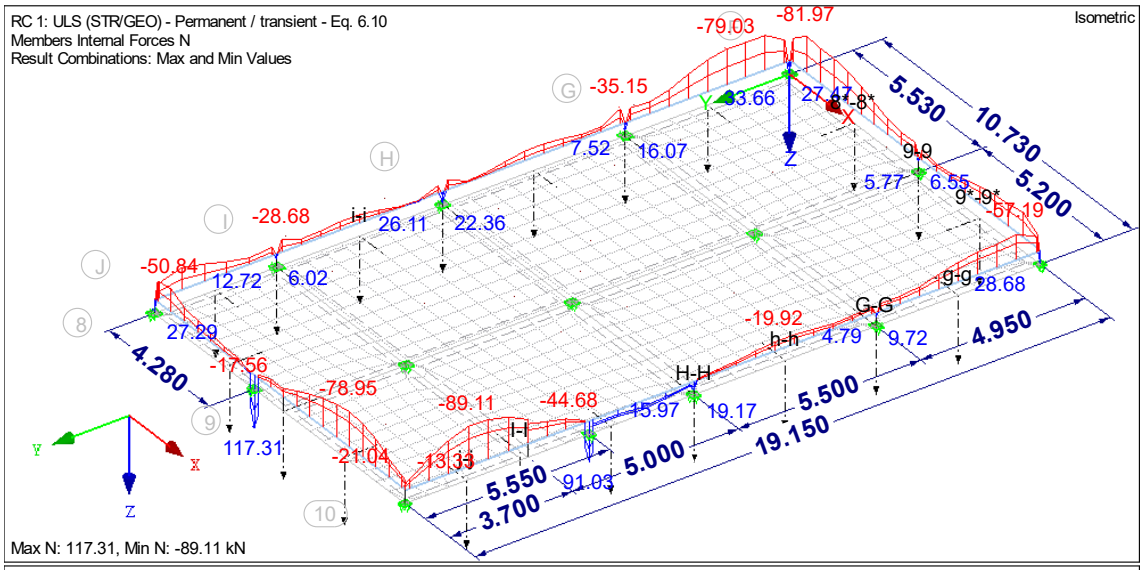

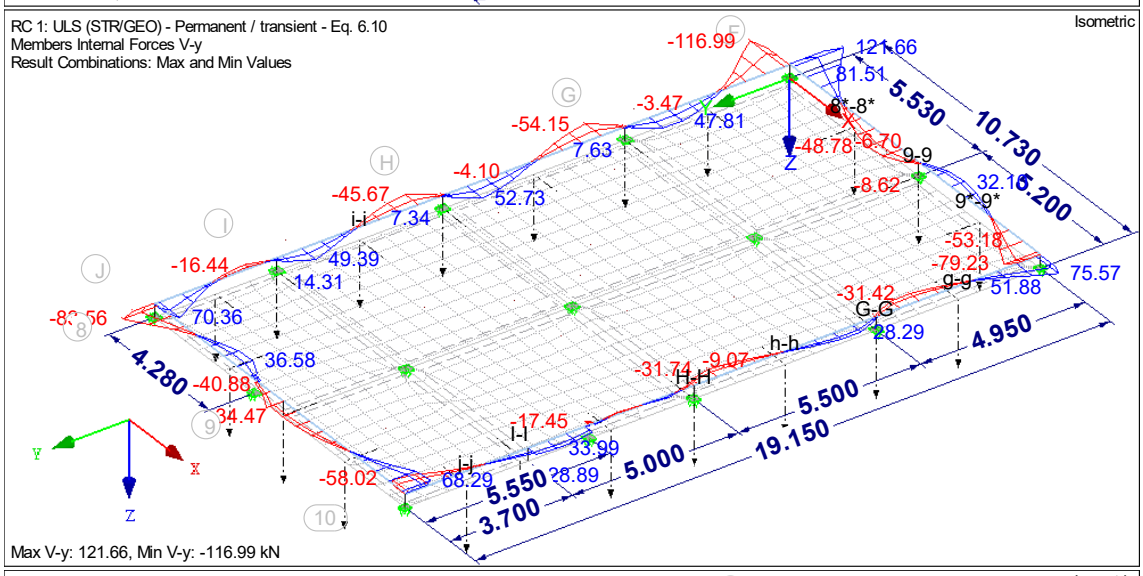

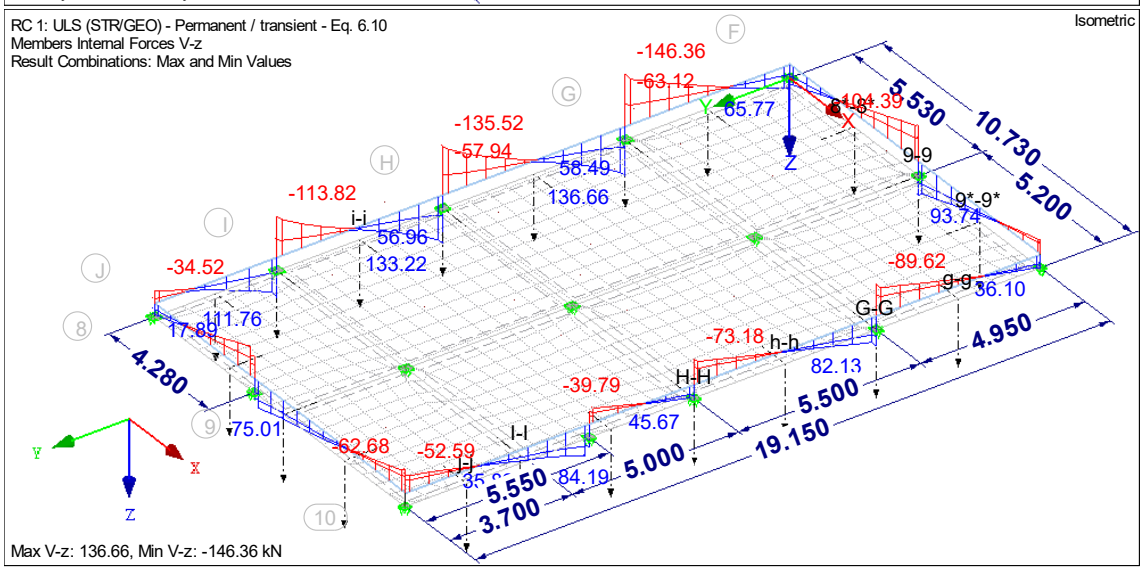

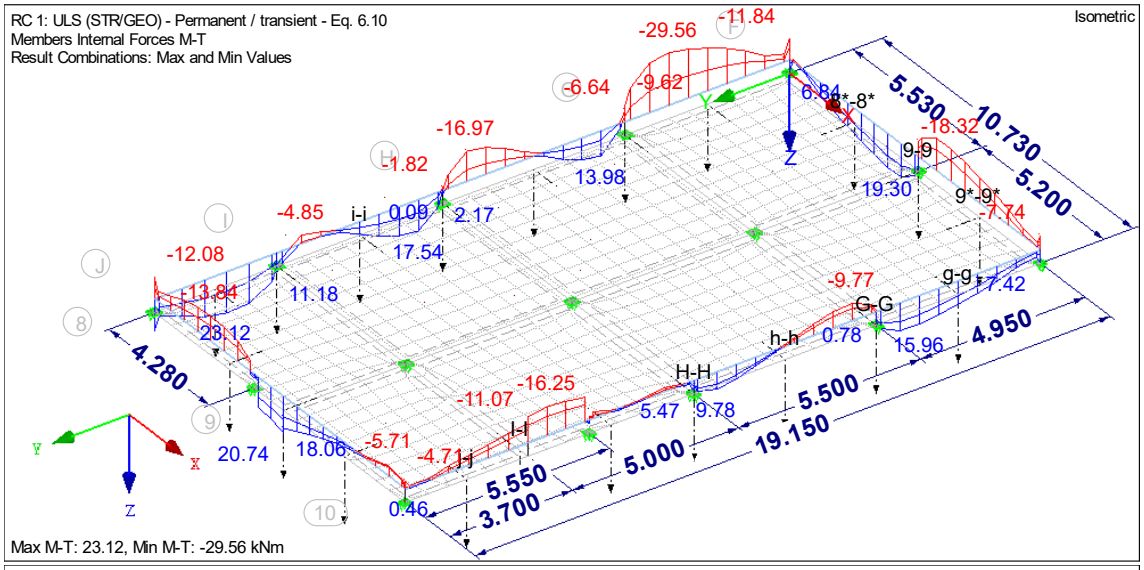
RC 1: ULS (STR/GEO) - Permanent / transient - Eq. 6.10
Members Internal Forces M-T
Result Combinations: Max and Min Values
Isometric
Max M-T: 23.12, Min M-T: -29.56 kNm

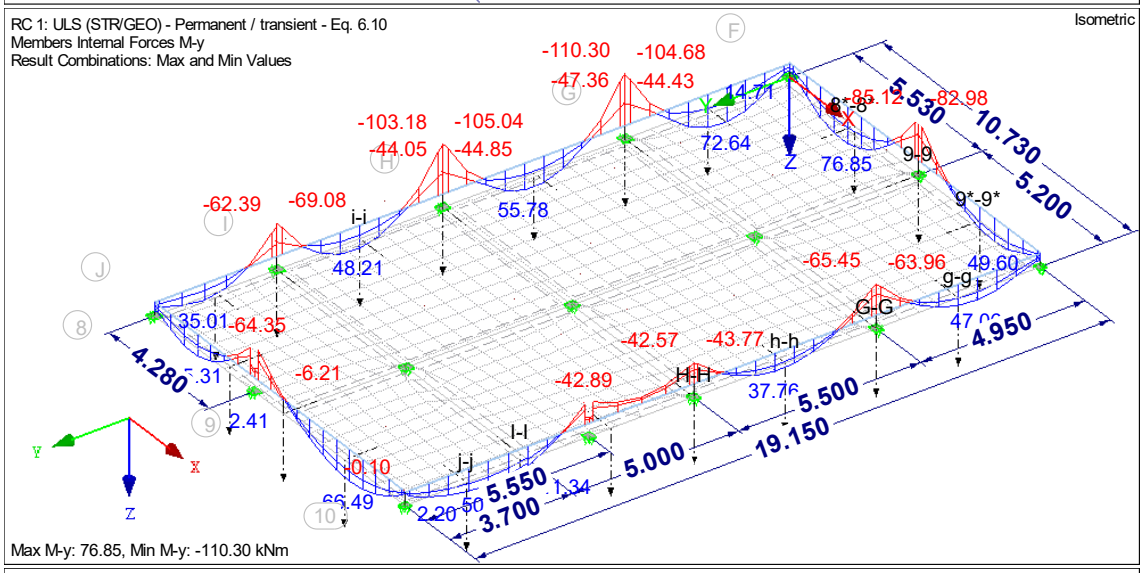
RC 1: ULS (STR/GEO) - Permanent / transient - Eq. 6.10
Members Internal Forces M-y
Result Combinations: Max and Min Values
Isometric
Max M-y: 76.85, Min M-y: -110.30 kNm

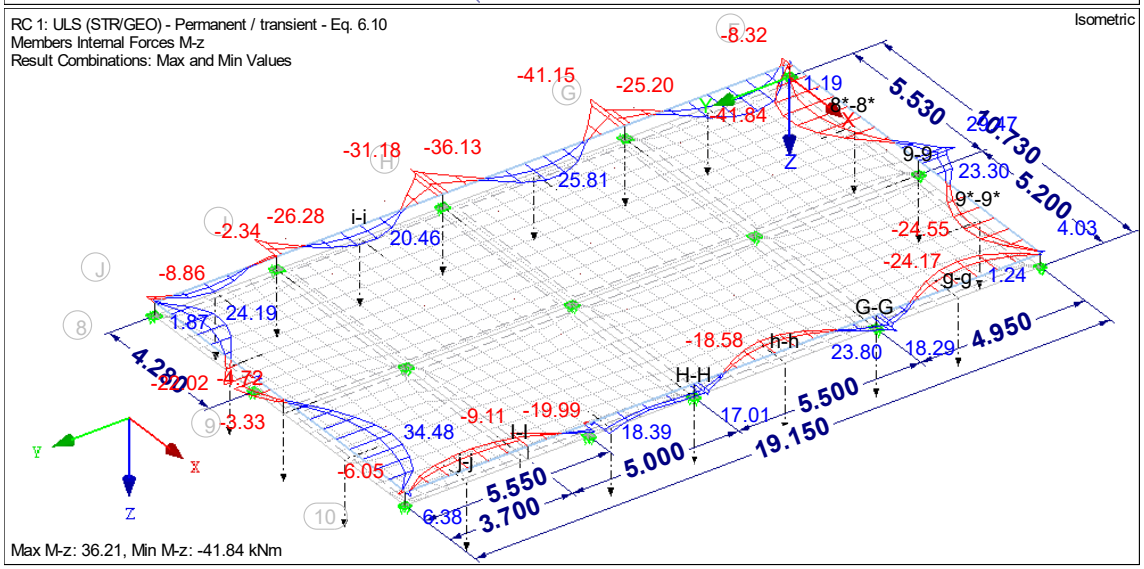
RC 1: ULS (STR/GEO) - Permanent / transient - Eq. 6.10
Members Internal Forces M-z
Result Combinations: Max and Min Values
Isometric
Max M-z: 36.21, Min M-z: -41.84 kNm

1.12. Rudak alakváltozása

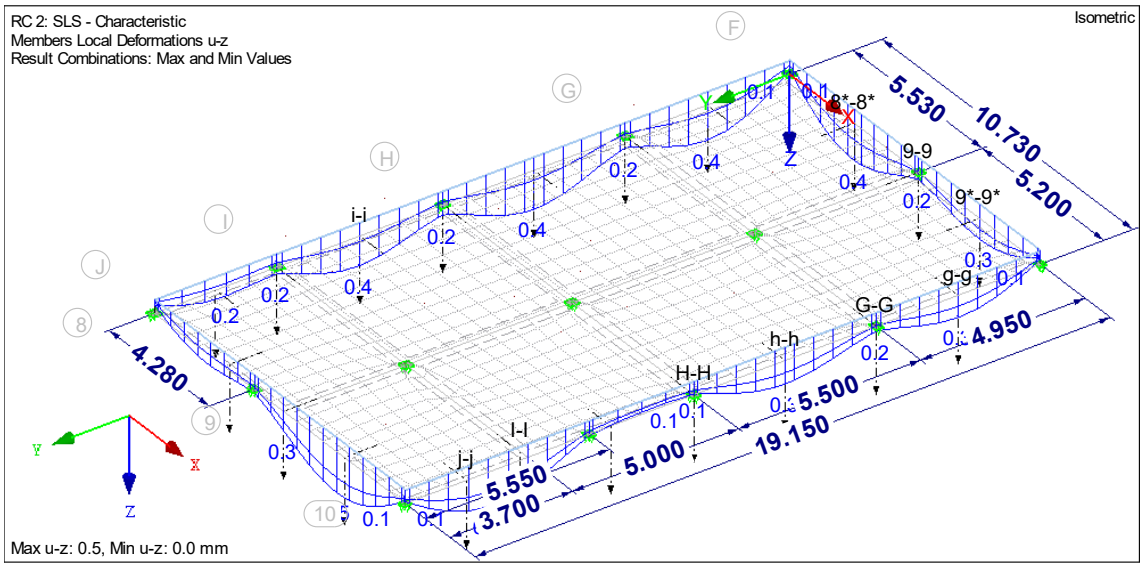

1.13. Gerendák vasalása

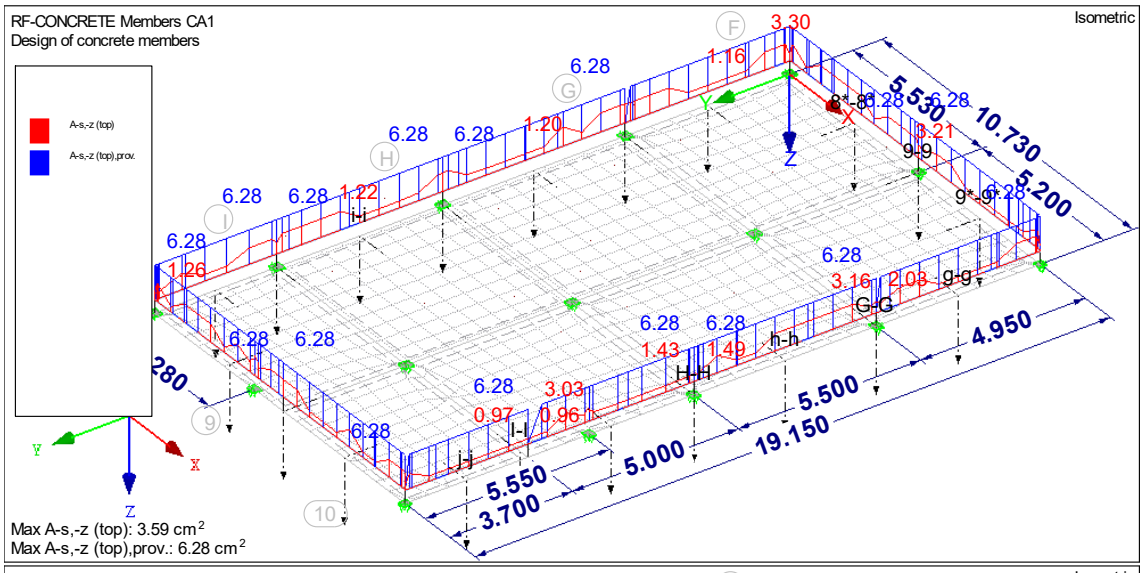

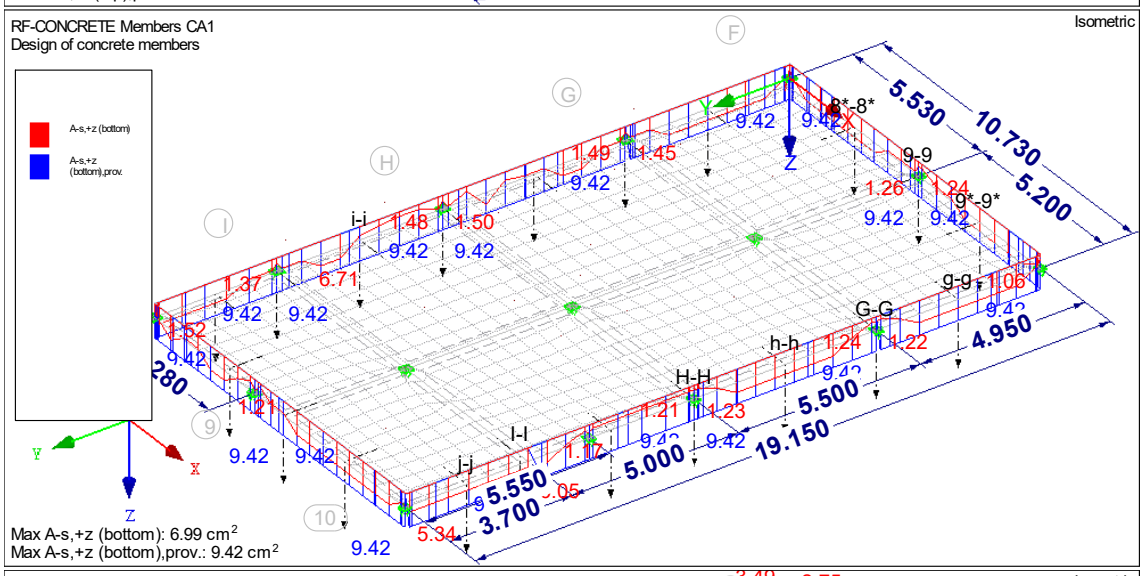

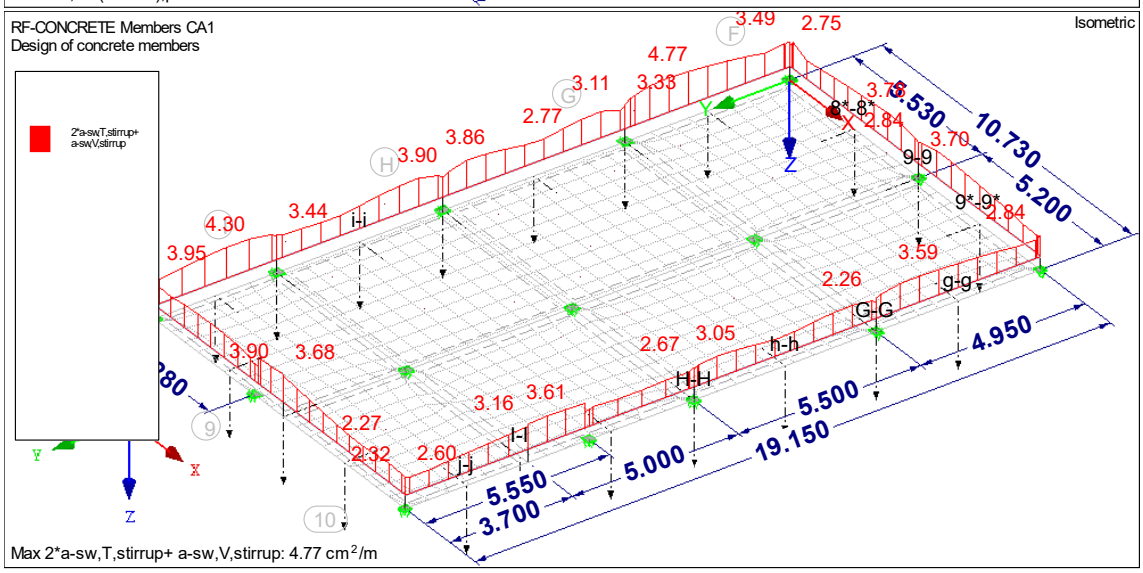

2. Közbenső födém

2.1. Geometria

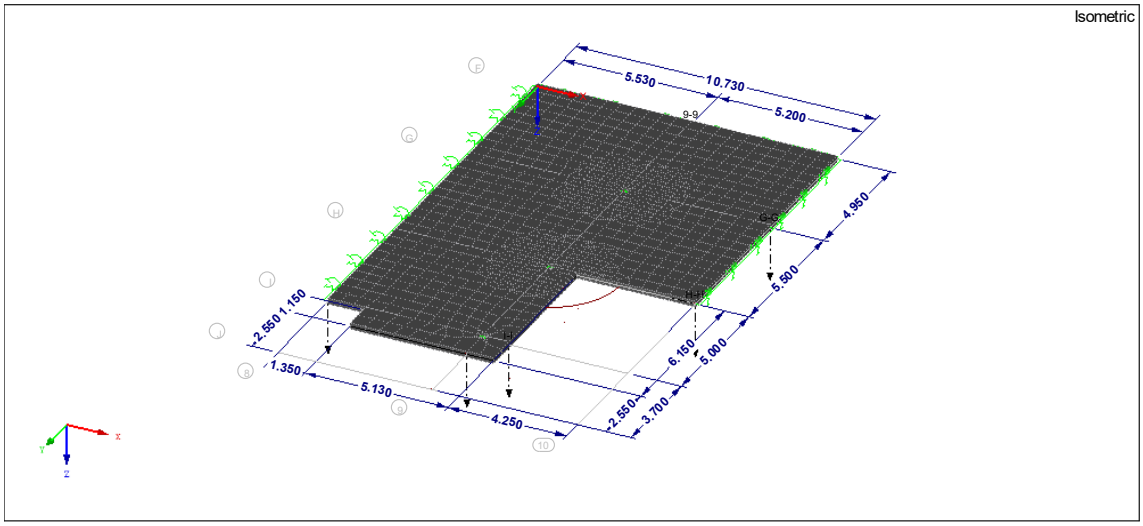

2.2. Anyagok

Material No.	Material Description	Modulus of Elasticity E [kN/cm²]	Shear Modulus G [kN/cm²]	Poisson's Ratio ν [-]	Specific Weight γ [kN/m³]	Coeff. of Th. Exp. α [1/°C]
1	Concrete C30/37 | EN 1992-1-1:2004/A1:2014	3300,00	1375,00	0,200	25,00	1,00E-05

2.3. Felületek

Surface No.	Surface Type Geometry	Surface Type Stiffness	Boundary Lines No.	Material No.	Thickness Type	Thickness d [mm]	Eccentricity e_z [mm]
1	Plane	Standard	1,7,12,6	1	Constant	220,0	0,0
2	Plane	Standard	8,13,7,2	1	Constant	220,0	0,0
3	Plane	Standard	4,10,14,8,3	1	Constant	220,0	0,0
4	Plane	Standard	11,15,10,5	1	Constant	220,0	0,0
5	Plane	Standard	18,20,17,14	1	Constant	220,0	0,0
6	Plane	Standard	19,21,18,15	1	Constant	220,0	0,0
7	Plane	Standard	23,27,22,12	1	Constant	220,0	0,0
8	Plane	Standard	17,25,28,23,13	1	Constant	220,0	0,0

2.4. Terhek és hatások

Load Case	Load Case Description	To Solve	EN 1990 | CEN* | Valszfal (Temp... Action Category	Self-Weight - Factor in Direction Active	X	Y	Z
LC1	Önsúly	+	Permanent	+	0,000	0,000	1,000
LC2	Állandó	+	Permanent/Imposed	-	0,000	0,000	0,000
LC3	Hasznos teher - Totális	+	Imposed - Category B: office areas	-	0,000	0,000	0,000
LC4	Hasznos teher - max. mezonyomaték 1	+	Imposed - Category B: office areas	-	0,000	0,000	0,000
LC5	Hasznos teher - max. mezonyomaték 2	+	Imposed - Category B: office areas	-	0,000	0,000	0,000
LC6	Hasznos teher - max. támasznyomaték	+	Imposed - Category B: office areas	-	0,000	0,000	0,000
LC7	Mozgatható válaszfal <1,0	+	Temperature (non fire)	-	0,000	0,000	0,000

2.5. Teherkombinációk

Combin. Express.	Combination Expression Description	Use	EN 1990 | CEN* | Valszfal (Temp... Design Situation	Generated Action Combinations
CE1	ULS	+	ULS (STR/GEO) - Permanent / transient - Eq. 6.10	AC1 ... AC10 (10/38)
CE2	SLS	+	SLS - Characteristic	AC11 ... AC20 (10/38)
CE3	SLS	+	SLS - Frequent	AC21 ... AC30 (10/38)
CE4	SLS	+	SLS - Quasi-permanent	AC31 ... AC38 (8/38)

2.6. Felületi igénybevételek

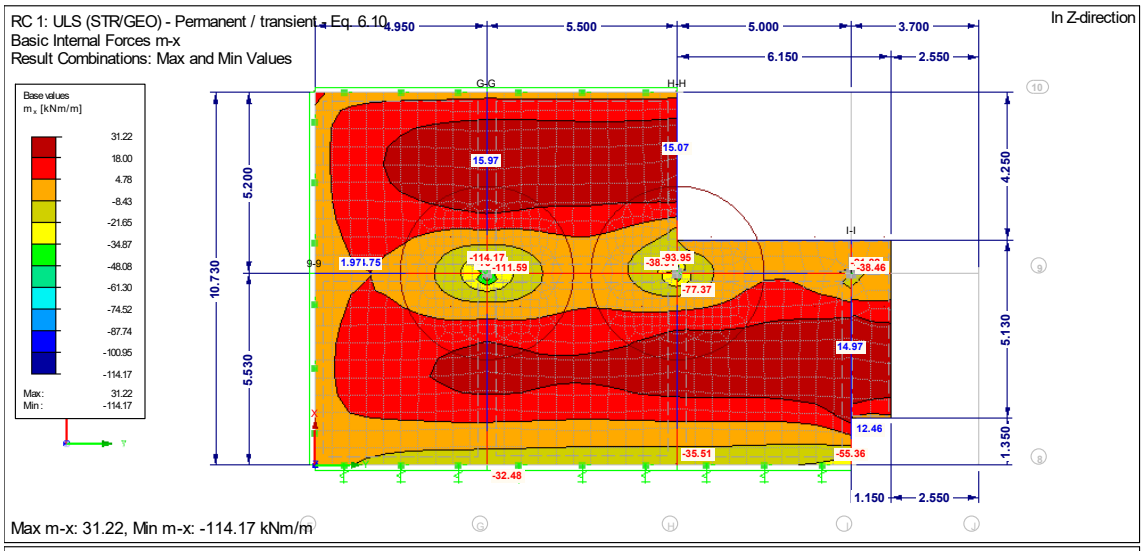

Max m-x: 31.22, Min m-x: -114.17 kNm/m

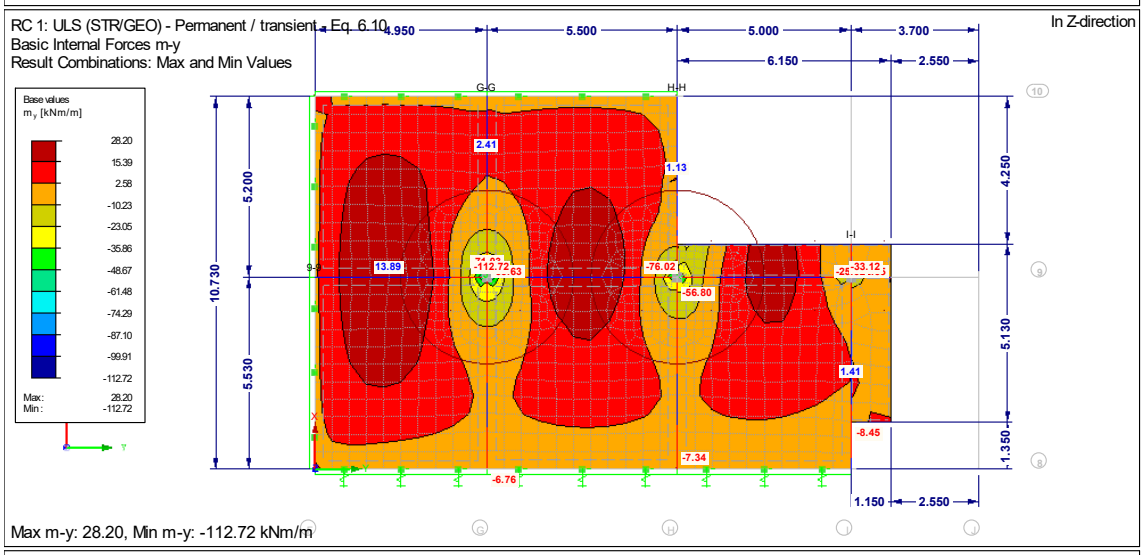

Max m-y: 28.20, Min m-y: -112.72 kNm/m

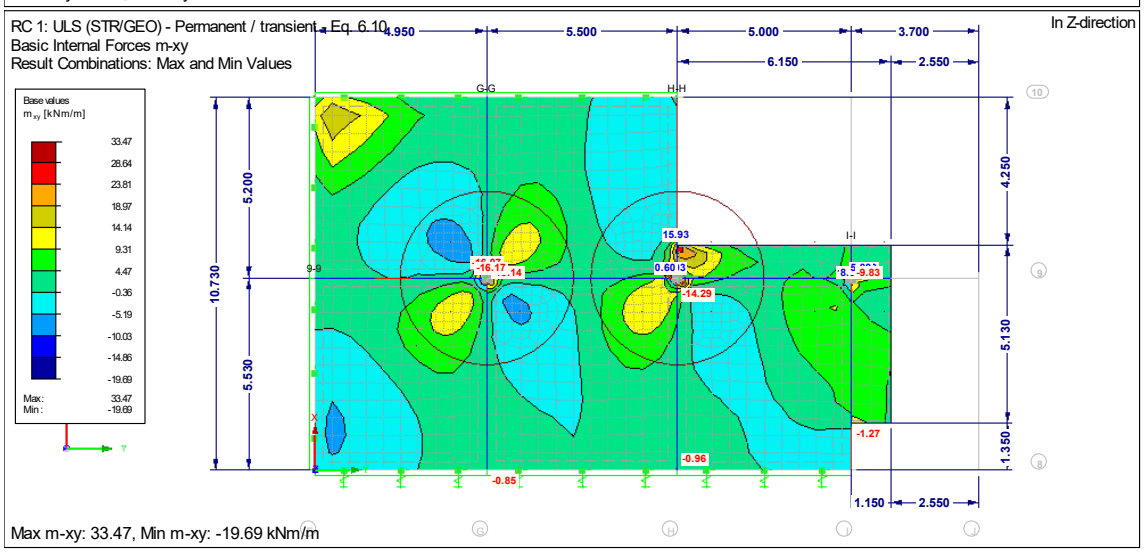

Max m-xy: 33.47, Min m-xy: -19.69 kNm/m

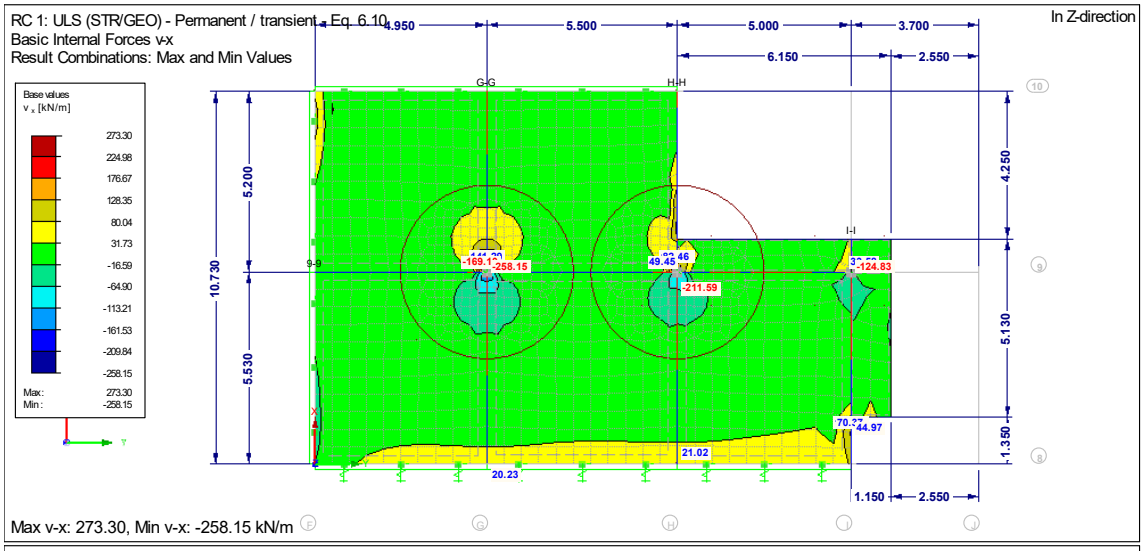

Max v-x: 273.30, Min v-x: -258.15 kN/m

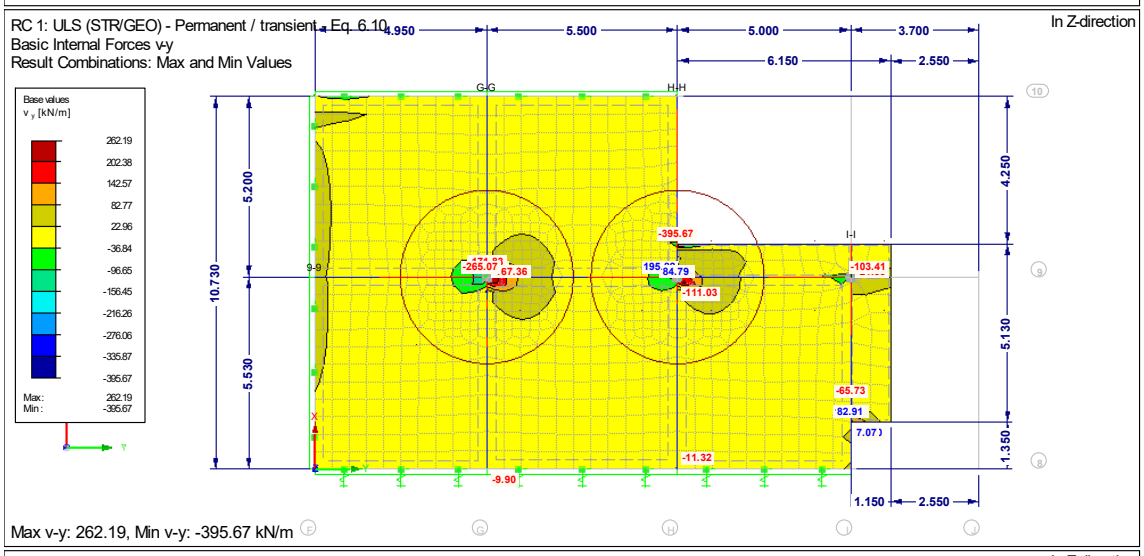

Max v-y: 262.19, Min v-y: -395.67 kN/m

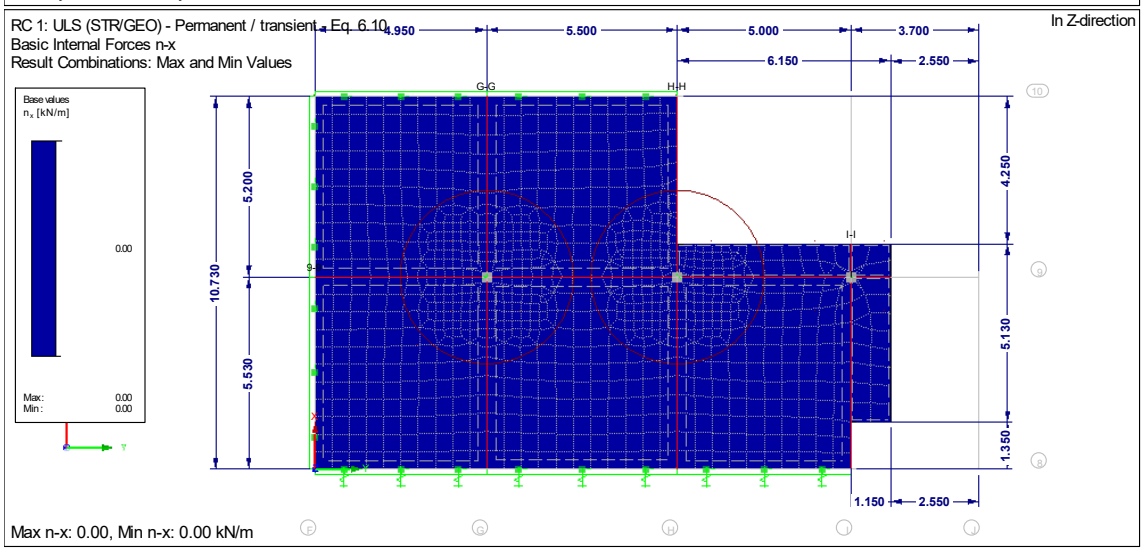

Max n-x: 0.00, Min n-x: 0.00 kN/m

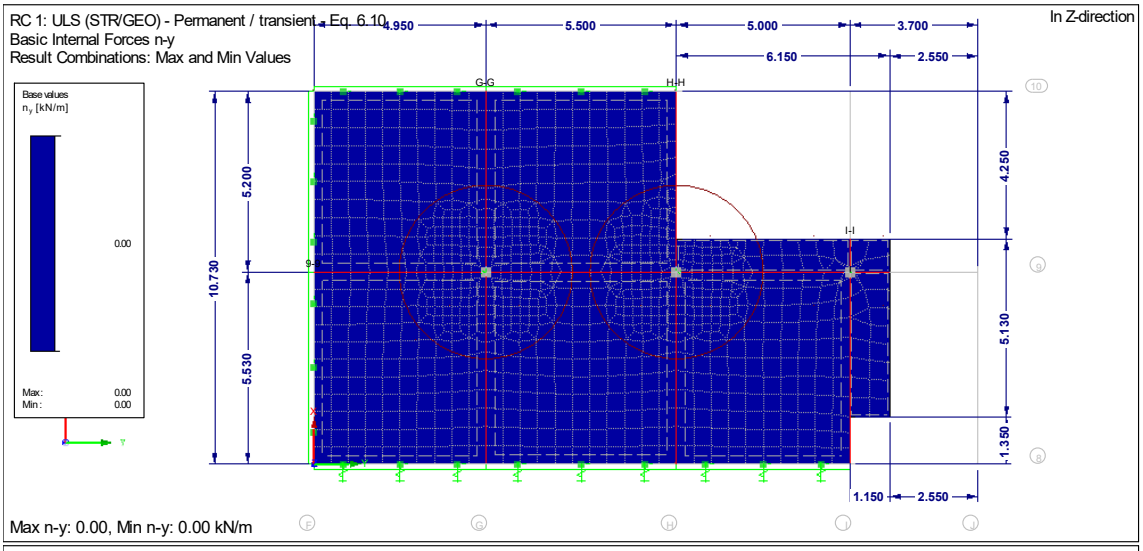

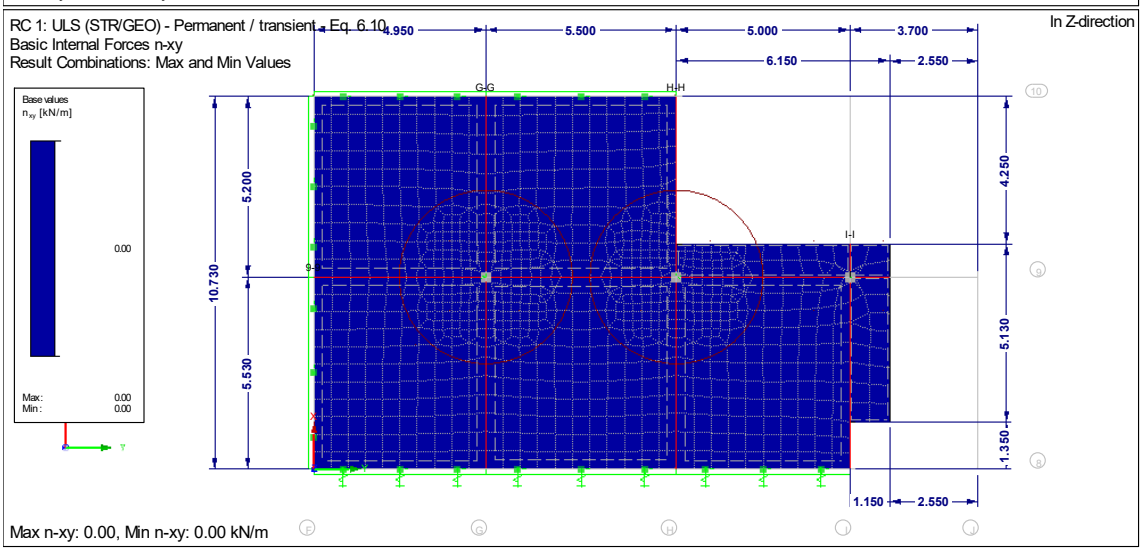

2.7. Felületi alakváltozások

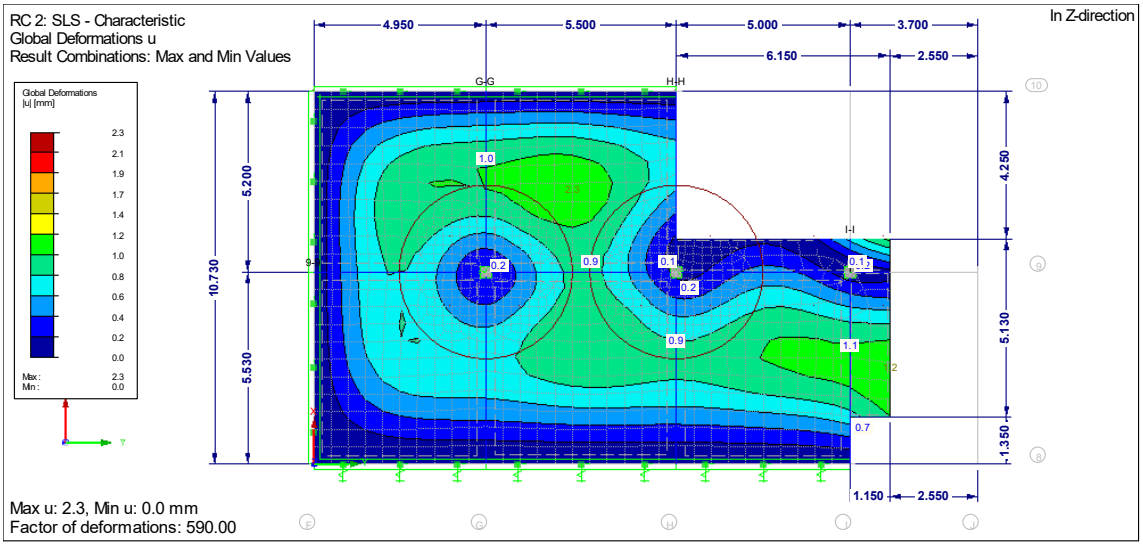

2.8. Közbenső födém vasalása

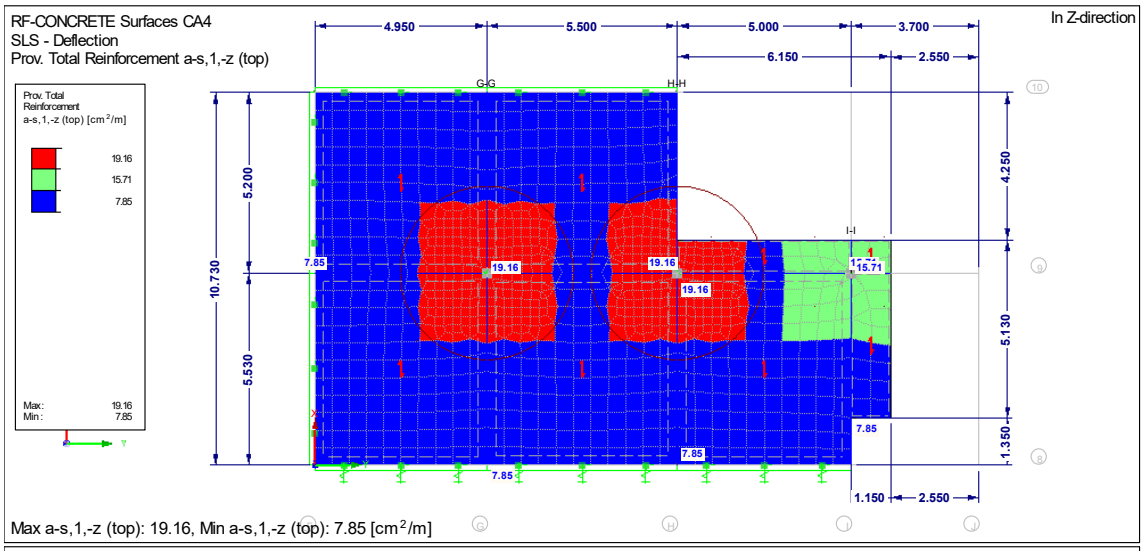

Max a-s,1,-z (top): 19.16, Min a-s,1,-z (top): 7.85 [cm²/m]

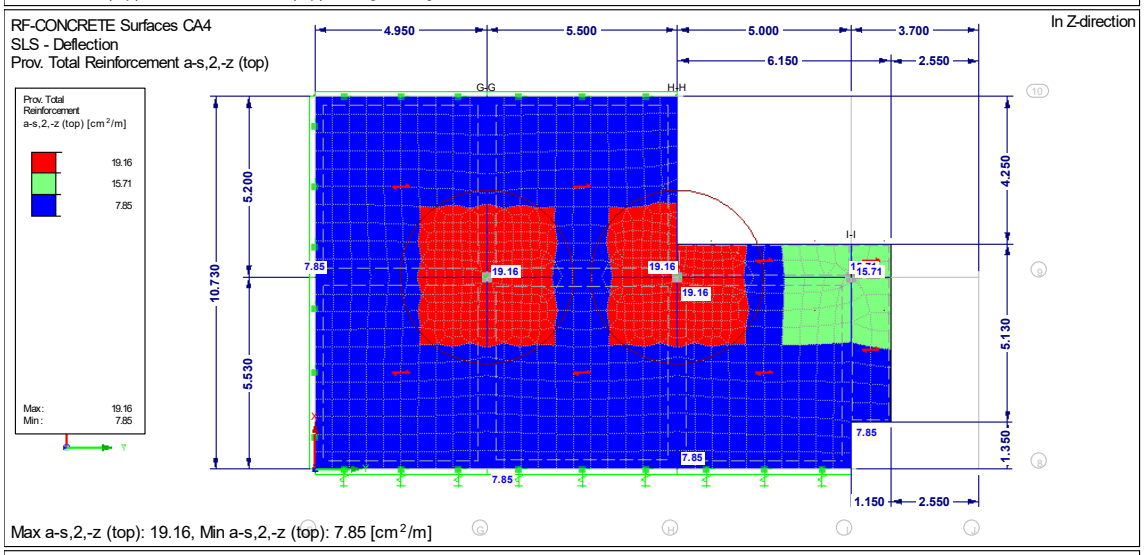

Max a-s,2,-z (top): 19.16, Min a-s,2,-z (top): 7.85 [cm²/m]

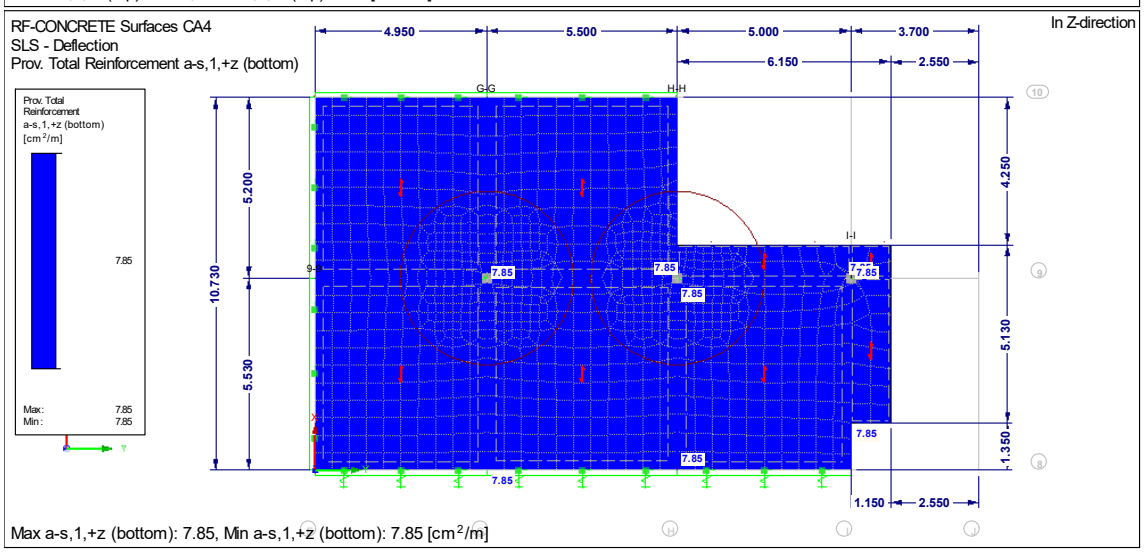

Max a-s,1,+z (bottom): 7.85, Min a-s,1,+z (bottom): 7.85 [cm²/m]

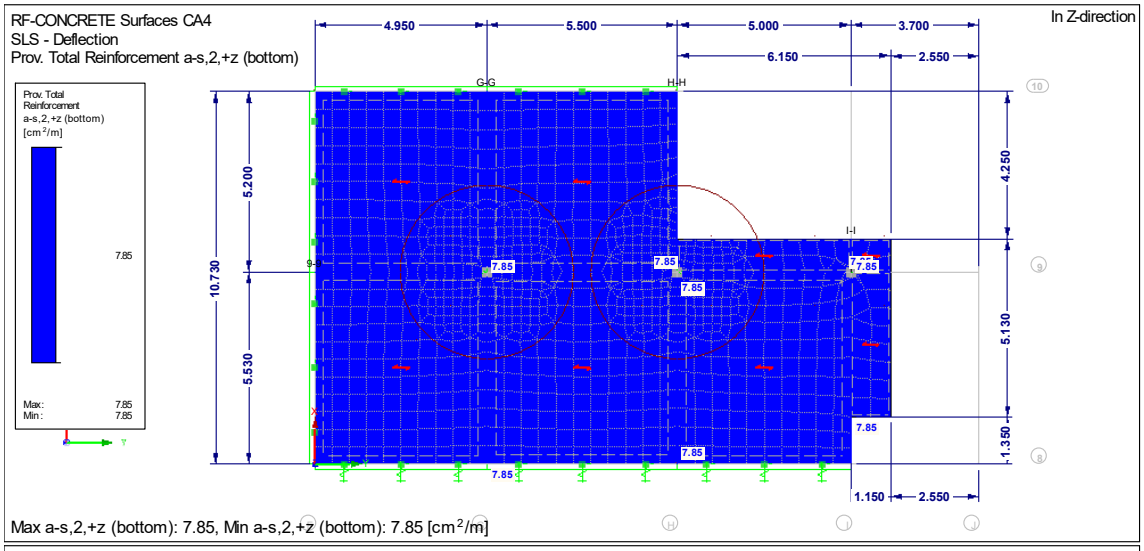
RF-CONCRETE Surfaces CA4
SLS - Deflection
Prov. Total Reinforcement a-s,2,+z (bottom)
In Z-direction
Prov. Total Reinforcement a-s,2,+z (bottom) [cm²/m]
7.85
Max: 7.85
Min: 7.85
4.950
5.500
5.000
3.700
6.150
2.550
10.730
5.200
5.530
4.250
5.130
1.350
1.150
2.550
G-G
H-H
I-I
Max a-s,2,+z (bottom): 7.85, Min a-s,2,+z (bottom): 7.85 [cm²/m]

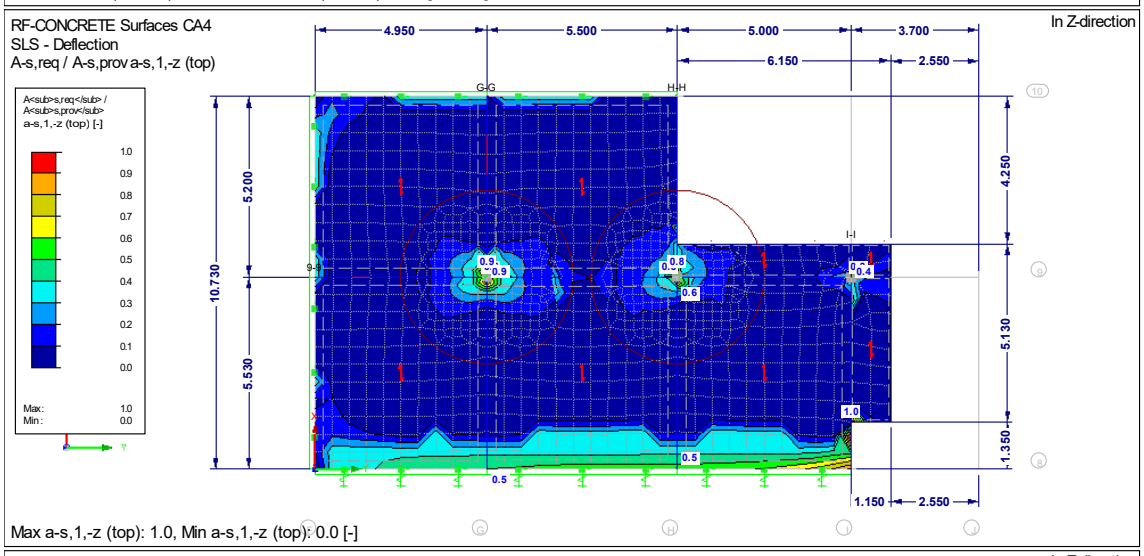
RF-CONCRETE Surfaces CA4
SLS - Deflection
A-s,req / A-s,prov a-s,1,-z (top)
In Z-direction
A_{s,req} / A_{s,prov} a-s,1,-z (top) [-]
1.0
0.9
0.8
0.7
0.6
0.5
0.4
0.3
0.2
0.1
0.0
Max: 1.0
Min: 0.0
4.950
5.500
5.000
3.700
6.150
2.550
10.730
5.200
5.530
4.250
5.130
1.350
1.150
2.550
G-G
H-H
I-I
Max a-s,1,-z (top): 1.0, Min a-s,1,-z (top): 0.0 [-]

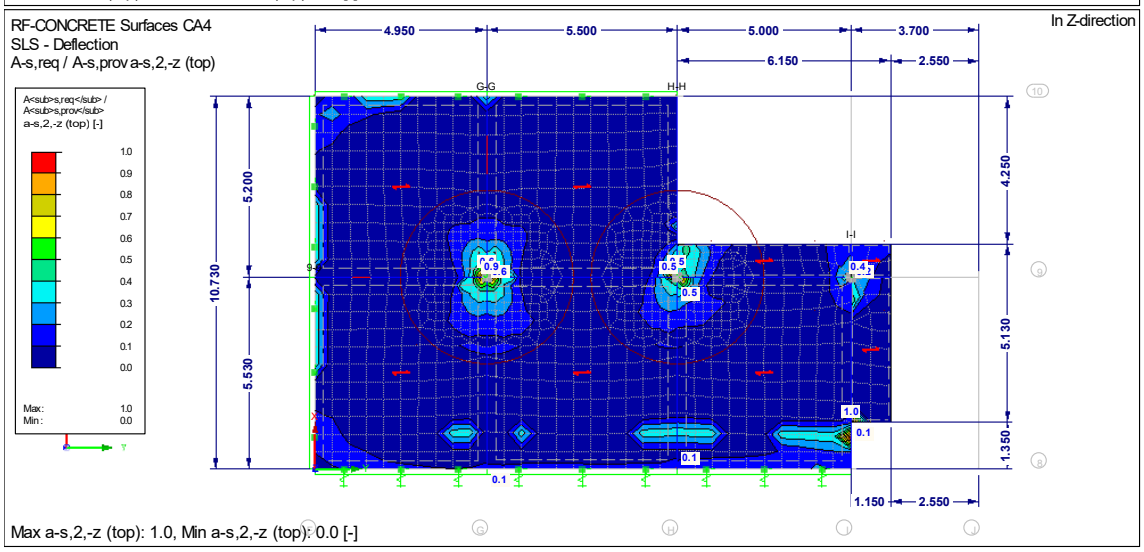
RF-CONCRETE Surfaces CA4
SLS - Deflection
A-s,req / A-s,prov a-s,2,-z (top)
In Z-direction
A_{s,req} / A_{s,prov} a-s,2,-z (top) [-]
1.0
0.9
0.8
0.7
0.6
0.5
0.4
0.3
0.2
0.1
0.0
Max: 1.0
Min: 0.0
4.950
5.500
5.000
3.700
6.150
2.550
10.730
5.200
5.530
4.250
5.130
1.350
1.150
2.550
G-G
H-H
I-I
Max a-s,2,-z (top): 1.0, Min a-s,2,-z (top): 0.0 [-]

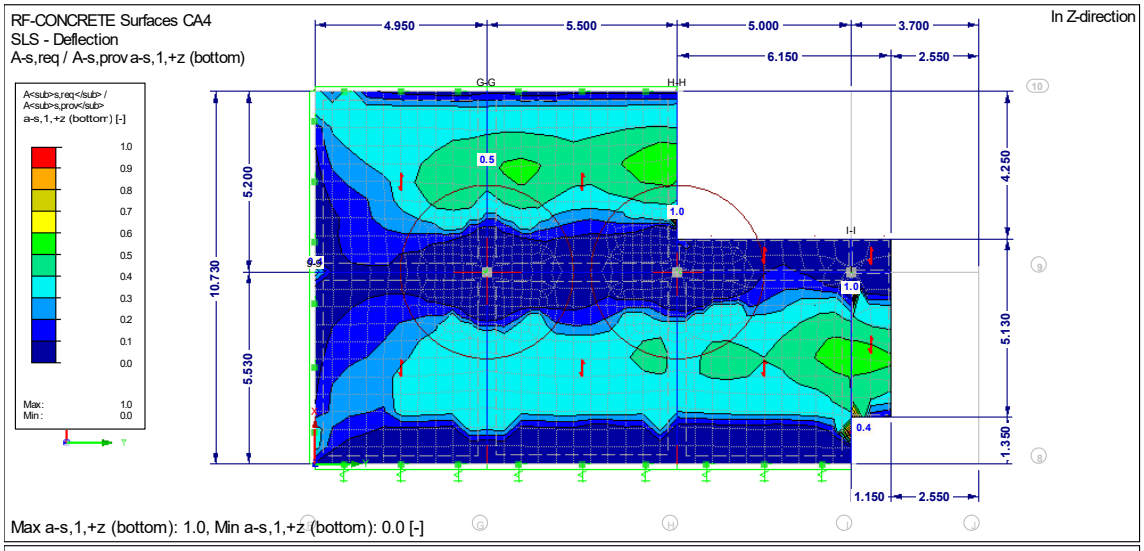

Max a-s,1,+z (bottom): 1.0, Min a-s,1,+z (bottom): 0.0 [-]

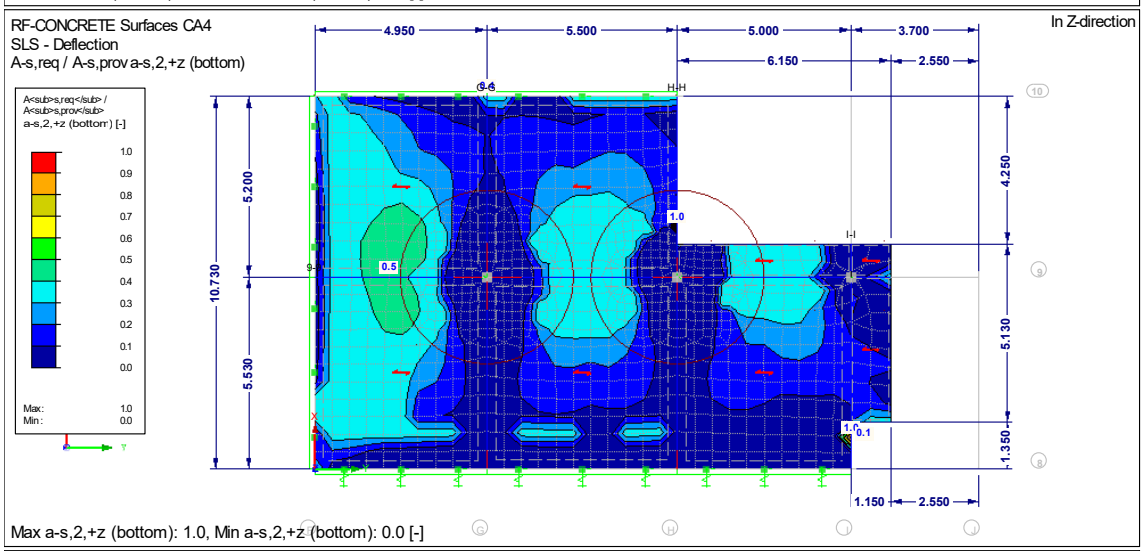

Max a-s,2,+z (bottom): 1.0, Min a-s,2,+z (bottom): 0.0 [-]

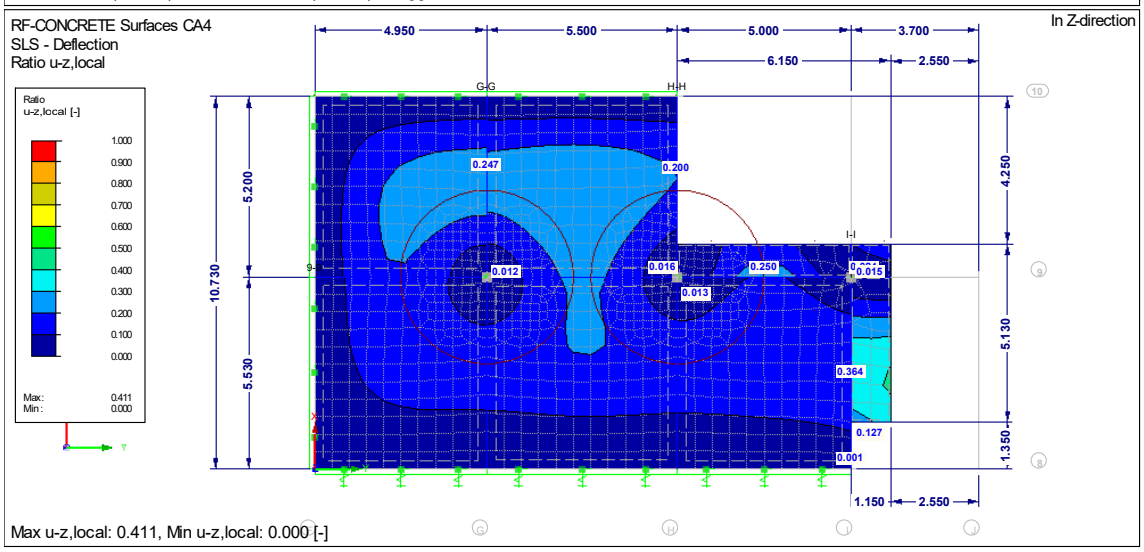

Max u-z,local: 0.411, Min u-z,local: 0.000 [-]

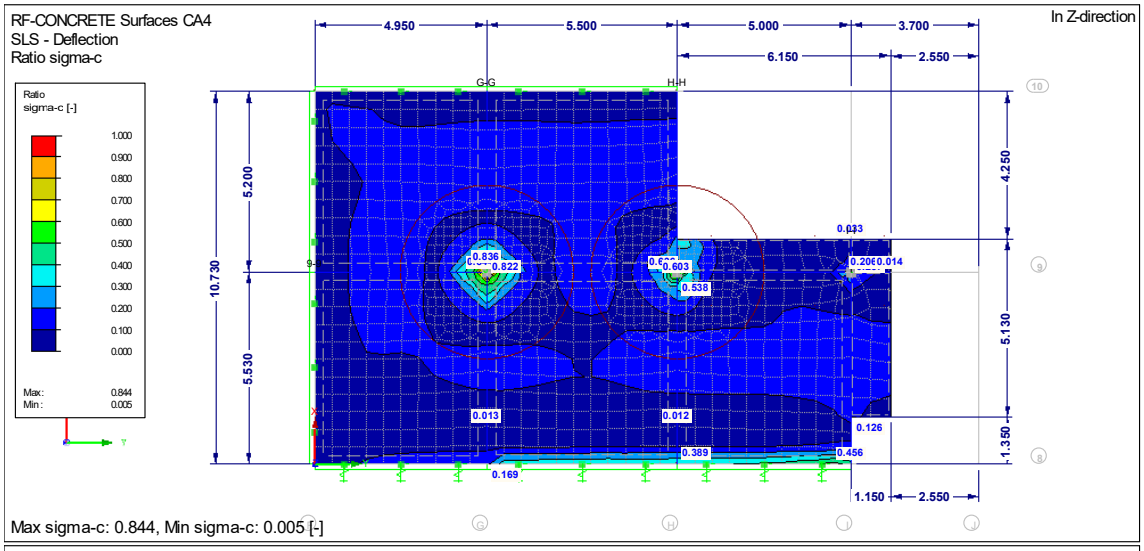

Max sigma-c: 0.844, Min sigma-c: 0.005 [-]

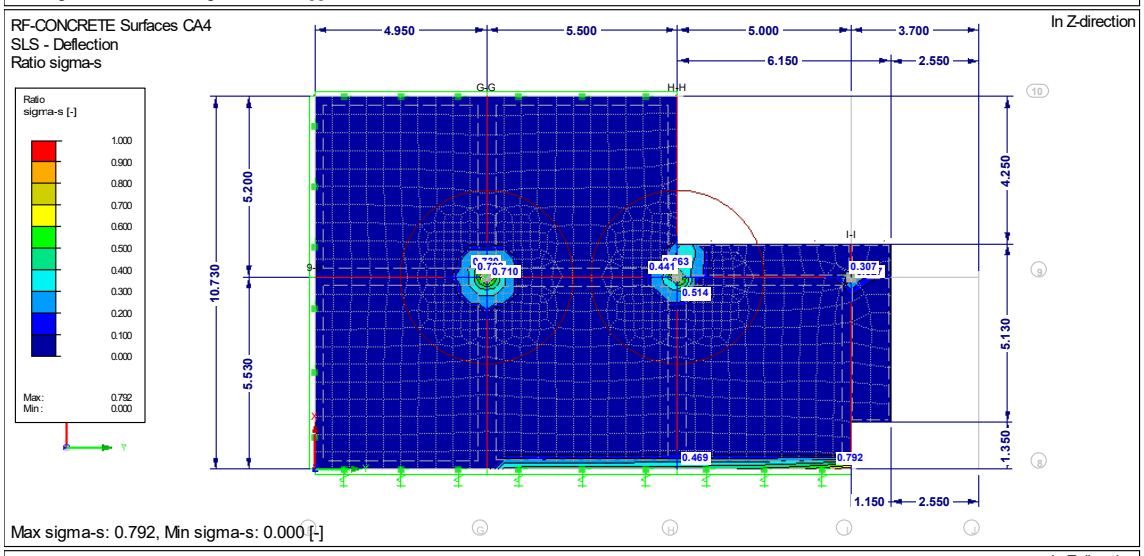

Max sigma-s: 0.792, Min sigma-s: 0.000 [-]

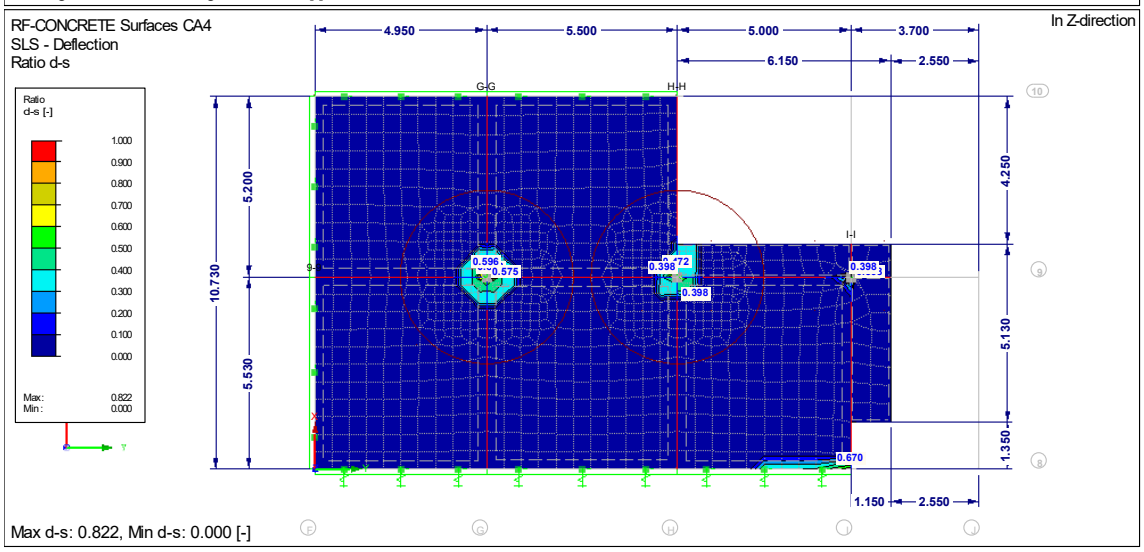

Max d-s: 0.822, Min d-s: 0.000 [-]

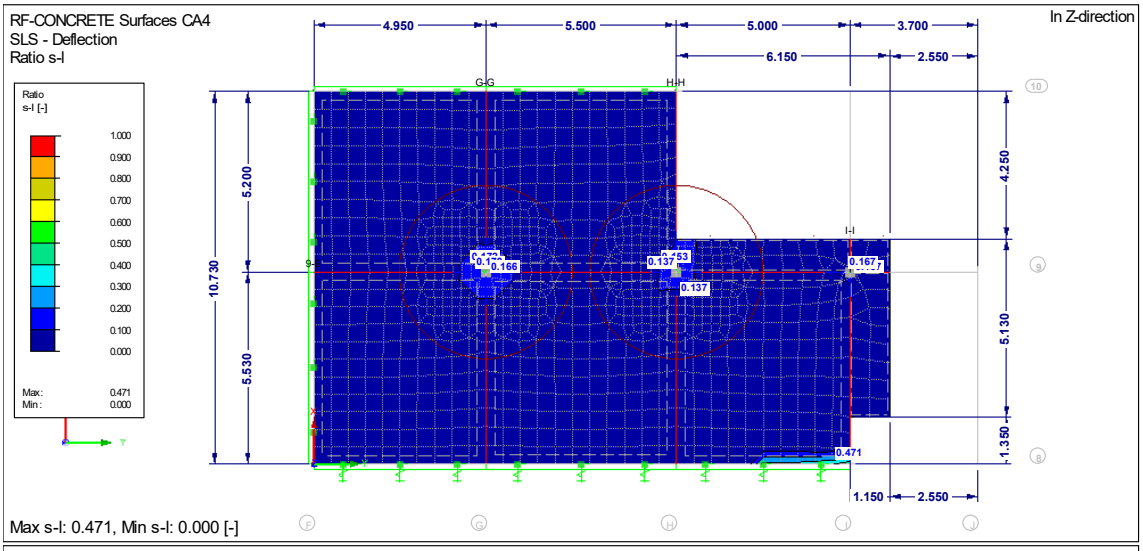
RF-CONCRETE Surfaces CA4
SLS - Deflection
Ratio s-l
In Z-direction
Ratio
s-l [-]
1.000
0.900
0.800
0.700
0.600
0.500
0.400
0.300
0.200
0.100
0.000
Max: 0.471
Min: 0.000
4.950
5.500
5.000
3.700
6.150
2.550
G-G
H-H
I-I
10.730
5.200
5.530
4.250
5.130
1.350
1.150
2.550
0.166
0.137
0.137
0.167
0.471
Max s-l: 0.471, Min s-l: 0.000 [-]

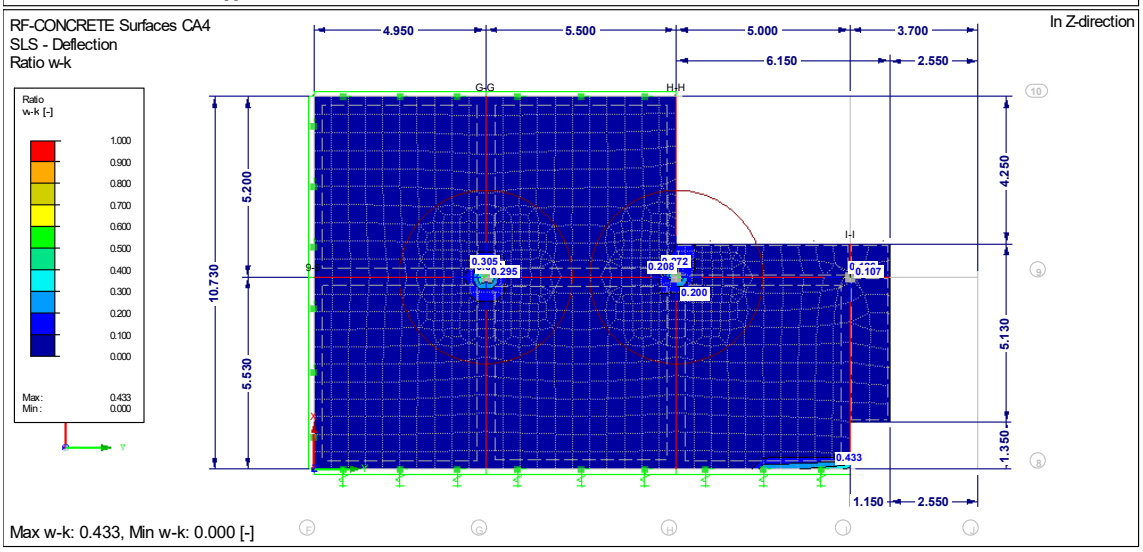
RF-CONCRETE Surfaces CA4
SLS - Deflection
Ratio w-k
In Z-direction
Ratio
w-k [-]
1.000
0.900
0.800
0.700
0.600
0.500
0.400
0.300
0.200
0.100
0.000
Max: 0.433
Min: 0.000
4.950
5.500
5.000
3.700
6.150
2.550
G-G
H-H
I-I
10.730
5.200
5.530
4.250
5.130
1.350
1.150
2.550
0.305
0.295
0.208
0.200
0.107
0.433
Max w-k: 0.433, Min w-k: 0.000 [-]

2.9. Közbenső födém átszúródási vizsgálata

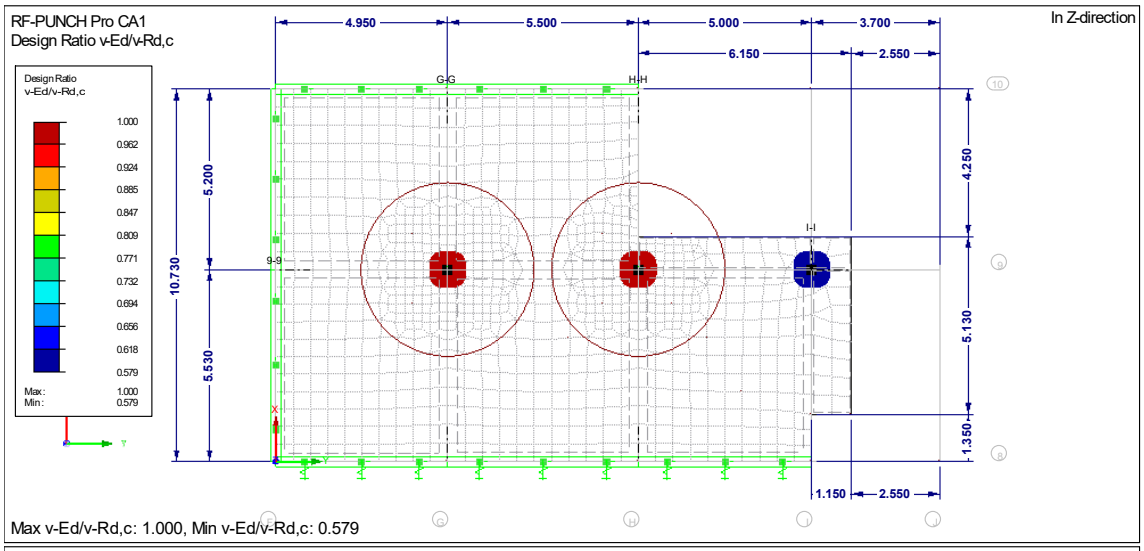

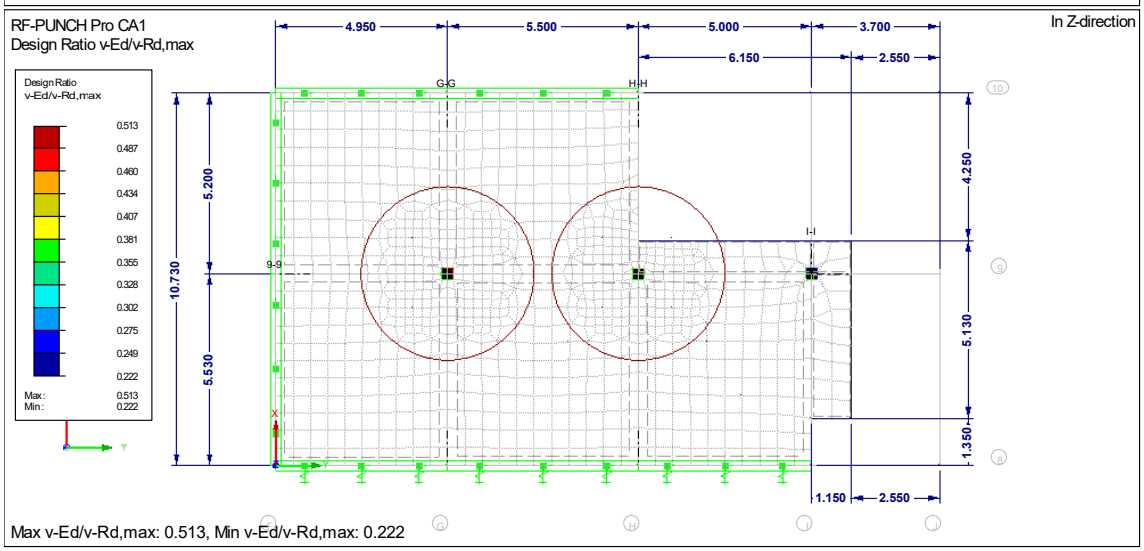

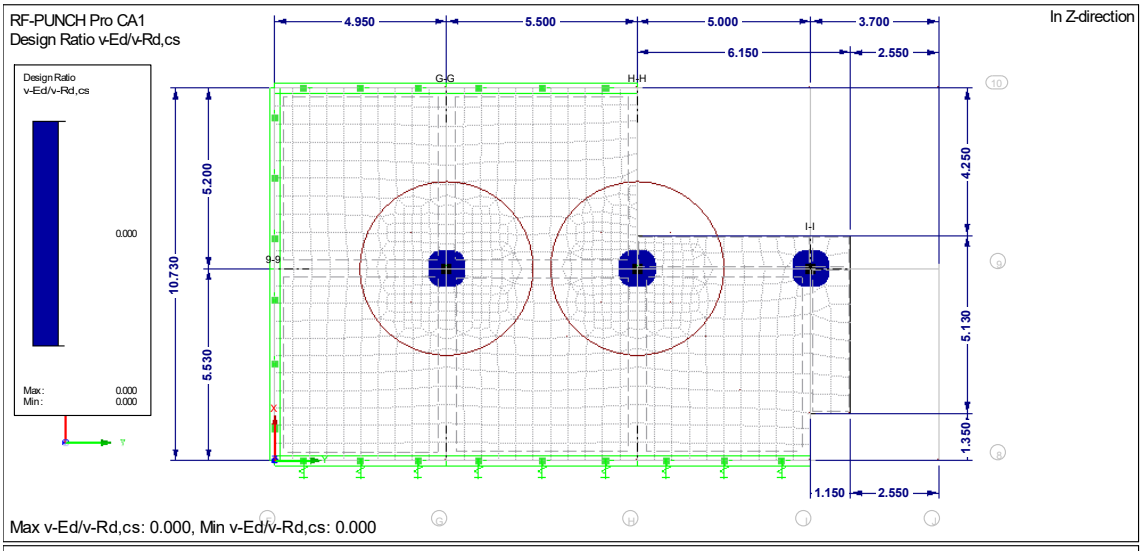
RF-PUNCH Pro CA1
Design Ratio v-Ed/v-Rd,cs
In Z-direction
Design Ratio
v-Ed/v-Rd,cs
0.000
Max: 0.000
Min: 0.000
4.950
5.500
5.000
3.700
6.150
2.550
G-G
H-H
I-I
9-9
10.730
5.200
5.530
4.250
5.130
1.350
1.150
2.550
Max v-Ed/v-Rd,cs: 0.000, Min v-Ed/v-Rd,cs: 0.000

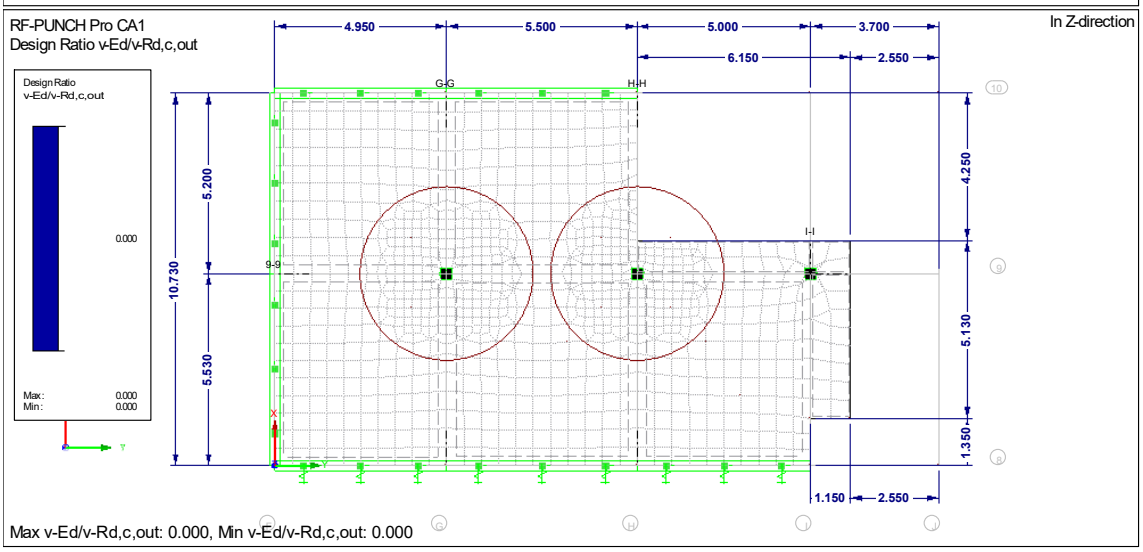
RF-PUNCH Pro CA1
Design Ratio v-Ed/v-Rd,c,out
In Z-direction
Design Ratio
v-Ed/v-Rd,c,out
0.000
Max: 0.000
Min: 0.000
4.950
5.500
5.000
3.700
6.150
2.550
G-G
H-H
I-I
9-9
10.730
5.200
5.530
4.250
5.130
1.350
1.150
2.550
Max v-Ed/v-Rd,c,out: 0.000, Min v-Ed/v-Rd,c,out: 0.000

3. Lemezalap, pillérek és falak

3.1. Geometria

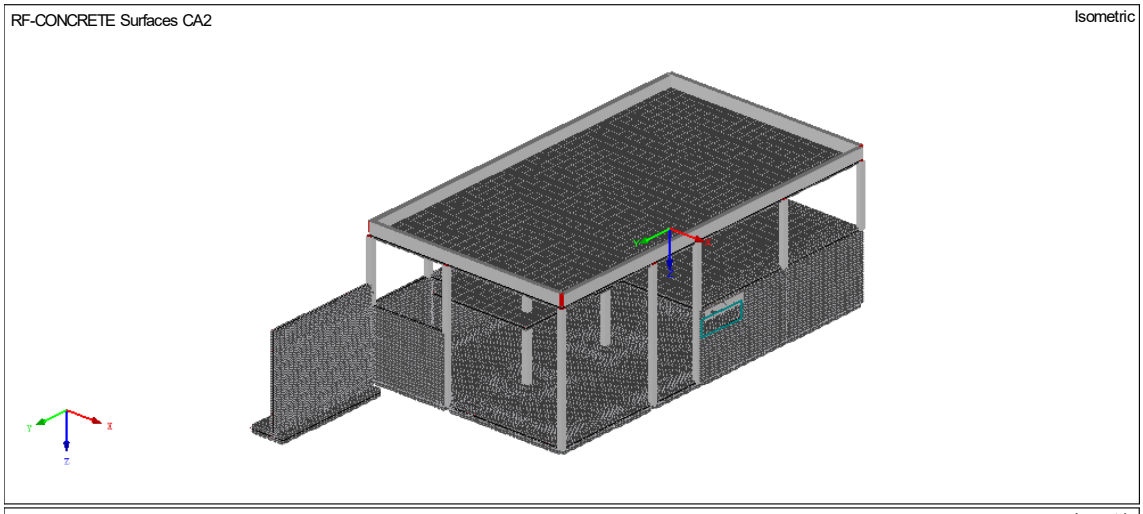

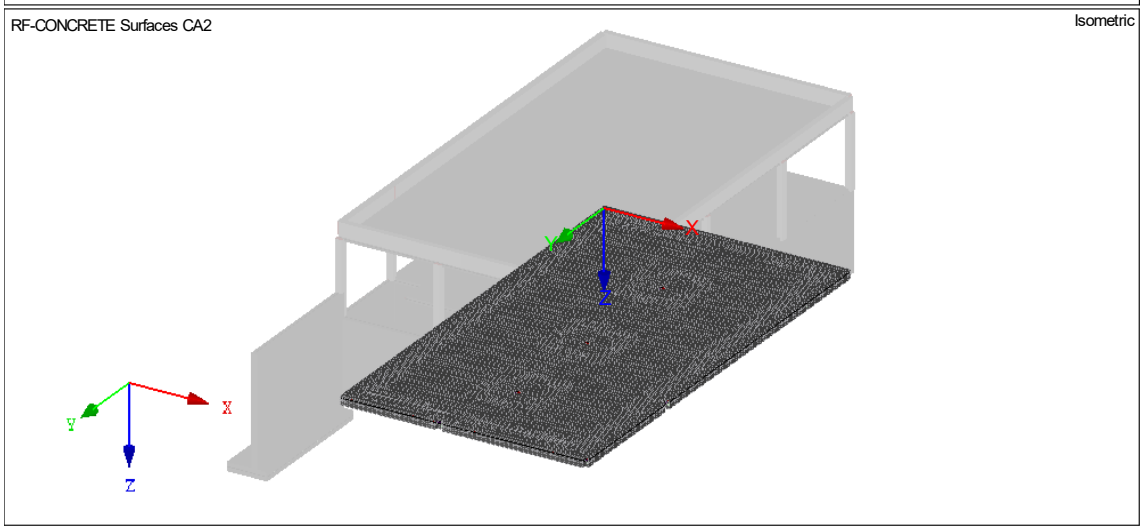

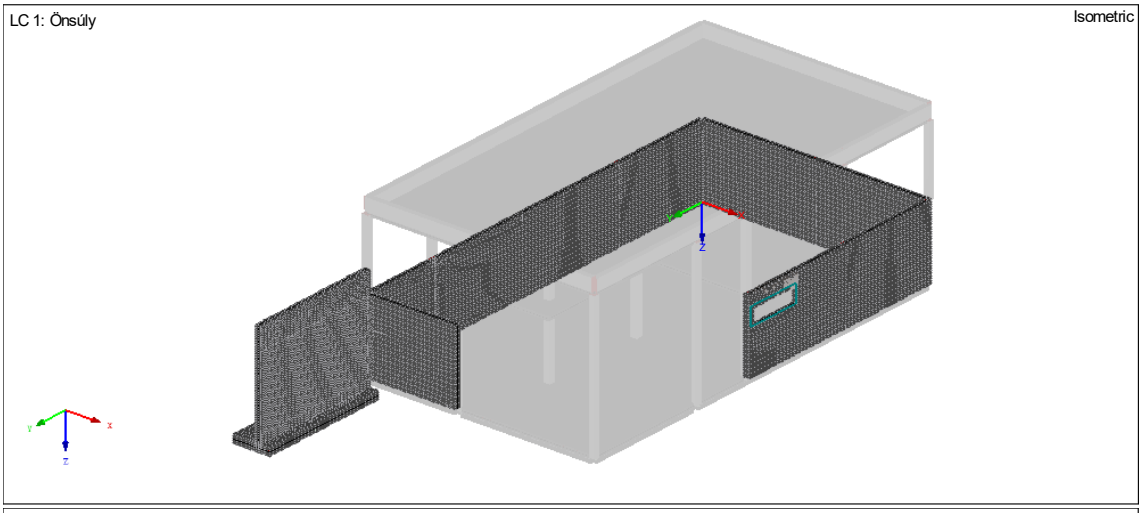

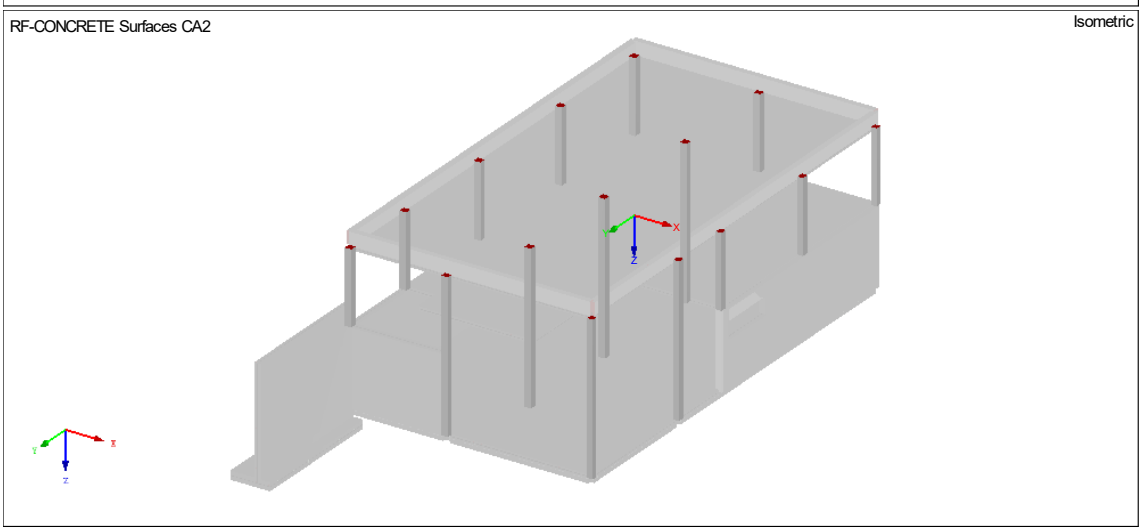

3.2. Anyagok

Material No.	Material Description	Modulus of Elasticity E [kN/cm²]	Shear Modulus G [kN/cm²]	Poisson's Ratio ν [-]	Specific Weight γ [kN/m³]	Coeff. of Th. Exp. α [1/°C]
1	Concrete C30/37 | EN 1992-1-1:2004/A1:2014	3300,00	1375,00	0,200	25,00	1,00E-05

3.3. Felületek

Surface No.	Surface Type Geometry	Surface Type Stiffness	Boundary Lines No.	Material No.	Thickness Type	Thickness d [mm]	Eccentricity e_z [mm]
1	Plane	Standard	3,1,2,39	1	Constant	400,0	0,0
2	Plane	Standard	10,8,6,5,9,12	1	Constant	300,0	0,0
3	Plane	Standard	17,15,13,12,16,19	1	Constant	300,0	0,0
4	Plane	Standard	23,26,24,22,20,19	1	Constant	300,0	0,0
5	Plane	Standard	207,205,181,209,33	1	Constant	300,0	0,0
6	Plane	Standard	38,36,33,37,42	1	Constant	300,0	0,0
7	Plane	Standard	37,35,39,43	1	Constant	300,0	0,0

8	Plane	Standard	45,47,46,39	1	Constant	400,0	0,0
9	Plane	Standard	49,51,48,31	1	Constant	120,0	0,0
11	Plane	Standard	83,57,44,5,58,91	1	Constant	300,0	0,0
12	Plane	Standard	71,75,101,76,72,77,108,78,73,79,115,185,182,183,186,74	1	Constant	200,0	0,0
13	Plane	Standard	52,66,134,139,138,149,168,163,160,157,155,1 53,150,141,116,83,57,44,6,8,10,13,15,17,20,22,24,50	1	Constant	220,0	0,0
14	Plane	Standard	74,71,75,98,85,80,84,95	1	Constant	400,0	100,0
18	Plane	Standard	76,72,77,105,87,81,86,102	1	Constant	400,0	100,0
19	Plane	Standard	129,136,128,102,119,124,120,105	1	Constant	400,0	100,0
20	Plane	Standard	131,137,130,109,121,125,122,112	1	Constant	400,0	100,0
21	Plane	Standard	101,128,136,129,108,130,137,131,115,179,184,180,186, 126,135,127	1	Constant	200,0	0,0
22	Plane	Standard	150,141,116,91,142,152	1	Constant	300,0	0,0
23	Plane	Standard	127,135,126,95,117,123,118,98	1	Constant	400,0	100,0
24	Plane	Standard	164,170,168,163,160,159	1	Constant	300,0	0,0
25	Plane	Standard	190,187,189,193	1	Constant	300,0	0,0
28	Plane	Standard	176,174,171,162,154,140,56,7,14,21,28,53,69,147	1	Constant	220,0	0,0
29	Plane	Standard	78,73,79,112,89,82,88,109	1	Constant	400,0	100,0
30	Plane	Standard	156,159,157,155,153,152	1	Constant	300,0	0,0
31	Plane	Standard	92,142,156,164,172,197,195,196,192,199,198,148,178, 179,184,180	1	Constant	400,0	100,0
32	Plane	Standard	9,16,23,40,55,41,200-202,64,178,185,182,183,92,58	1	Constant	400,0	100,0

3.4. Szelvények

Section	Cross-Section	Material	Moments of inertia [cm^4]			Cross-Sectional Areas [cm^2]		
No.	Description [mm]	No.	Torsion J	Bending I_y	Bending I_z	Axial A	Shear A_y	Shear A_z
1	Rectangle 300/300	1	113940,00	67500,00	67500,00	900,00	750,00	750,00
2	Rectangle 300/250	1	77484,01	39062,50	56250,00	750,00	625,00	625,00
3	Rectangle 250/300	1	77484,01	56250,00	39062,50	750,00	625,00	625,00
4	Rectangle 250/250	1	54947,92	32552,08	32552,08	625,00	520,83	520,83
5	Rectangle 250/550	1	204716,12	346614,60	71614,59	1375,00	1145,83	1145,83
6	Rectangle 300/550	1	326142,80	415937,54	123750,00	1650,00	1375,00	1375,00
7	Rectangle 250/600	1	230672,83	450000,03	78125,00	1500,00	1250,00	1250,00
9	Rectangle 300/500	1	281719,58	312499,99	112500,01	1500,00	1250,00	1250,00

3.5. Terhek és hatások

Load	Load Case	To	EN 1990 | CEN* | Valszfal	Self-Weight - Factor in Direction			
Case	Description	Solve	Action Category	Active	X	Y	Z
LC1	Önsúly	+	Permanent	+	0,000	0,000	1,000
LC2	Állandó	+	Permanent/Imposed	-	0,000	0,000	0,000
LC7	Hóteher	+	Snow (H ≤ 1000 m a.s.l.)	-	0,000	0,000	0,000
LC8	Szélteher X+	+	Wind	-	0,000	0,000	0,000

LC9	Szélteher X-	+	Wind	-	0,000	0,000	0,000
LC10	Szélteher Y+	+	Wind	-	0,000	0,000	0,000
LC11	Szélteher Y-	+	Wind	-	0,000	0,000	0,000
LC12	Hasznos teher - Teto	+	Imposed - Category H: roofs	-	0,000	0,000	0,000
LC13	Hasznos teher - Födém	+	Imposed - Category B: office areas	-	0,000	0,000	0,000
LC14	Mozgatható válaszfalak <1,0 kN/m	+		-	0,000	0,000	0,000

3.6. Teherkombinációk

Combin. Express.	Combination Expression Description	Use	EN 1990 | CEN* | Valszfal (Temp... Design Situation	Generated Action Combinations
CE1	ULS	+	ULS (STR/GEO) - Permanent / transient - Eq. 6.10	AC1 ... AC212 (212/472)
CE2	SLS	+	SLS - Characteristic	AC213 ... AC318 (106/472)
CE3	SLS	+	SLS - Frequent	AC319 ... AC424 (106/472)
CE4	SLS	+	SLS - Quasi-permanent	AC425 ... AC472 (48/472)

3.7. Felületi igénybevételek – Lemezalap

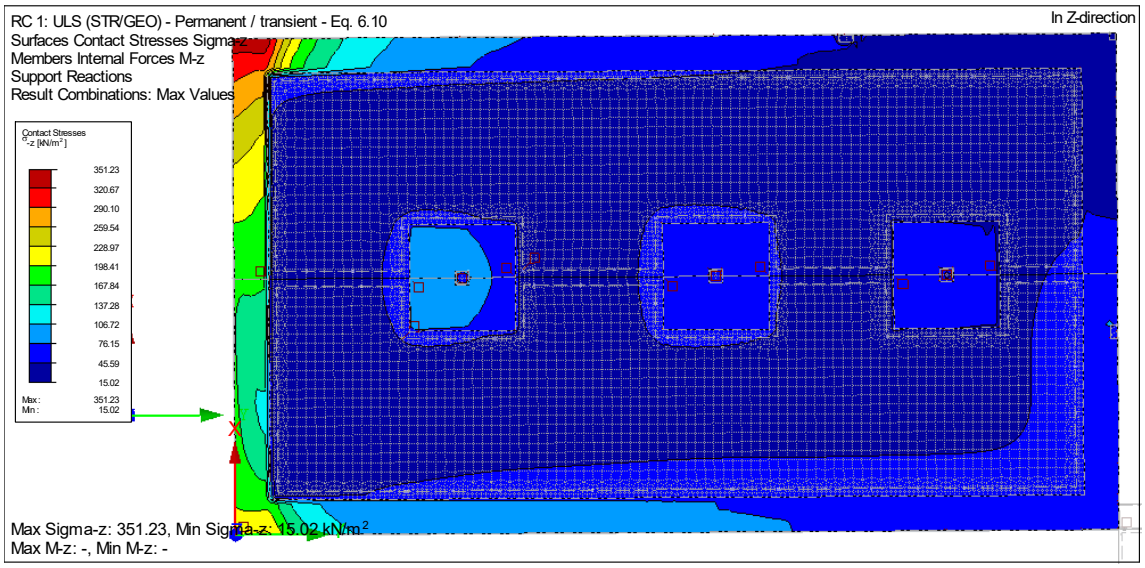

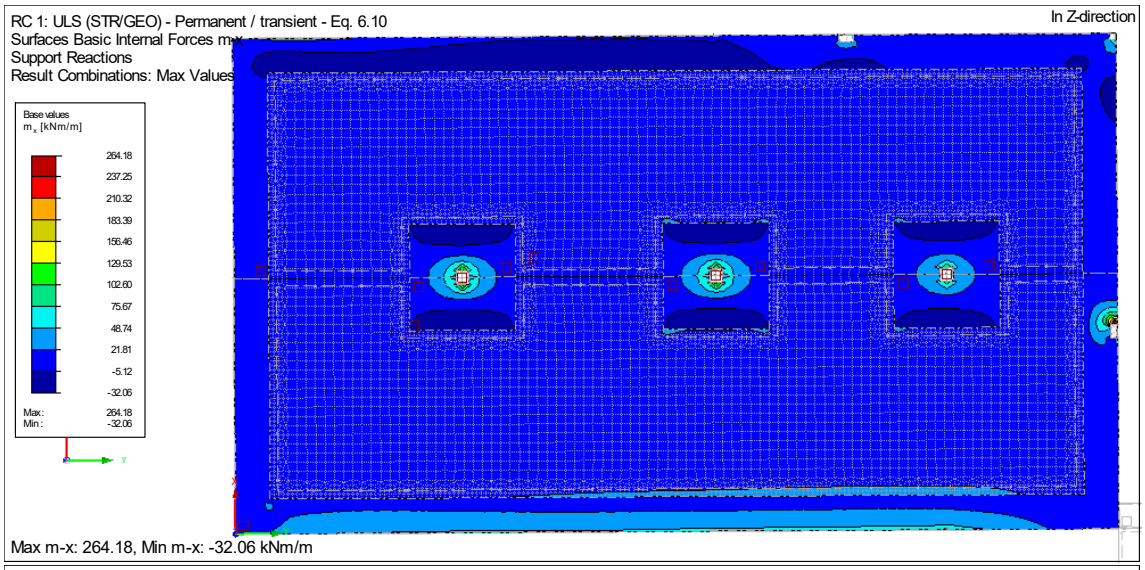

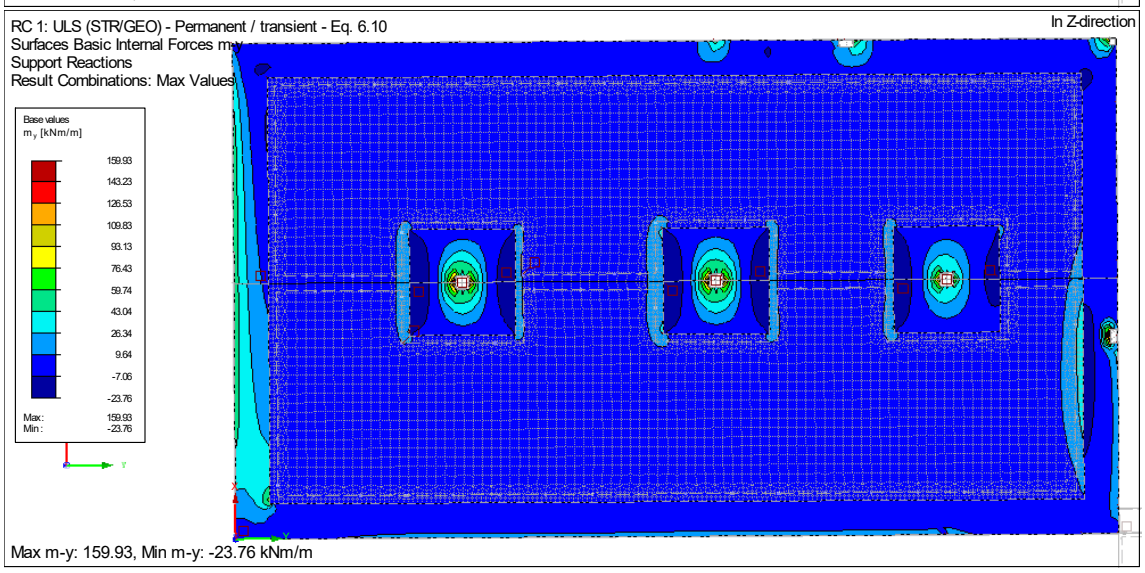

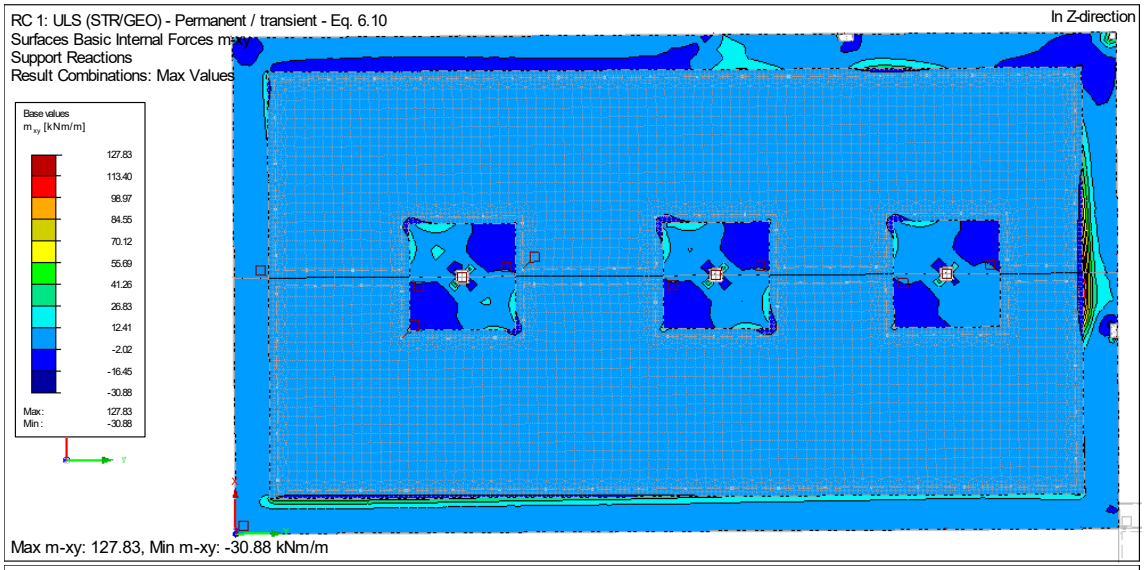

Max m-xy: 127.83, Min m-xy: -30.88 kNm/m

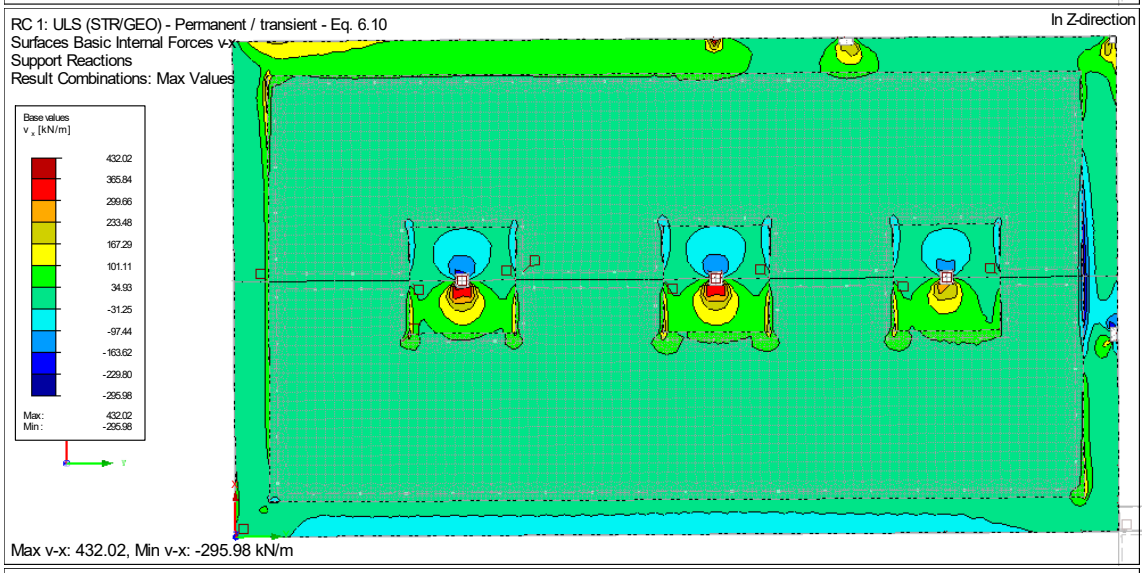

Max v-x: 432.02, Min v-x: -295.98 kN/m

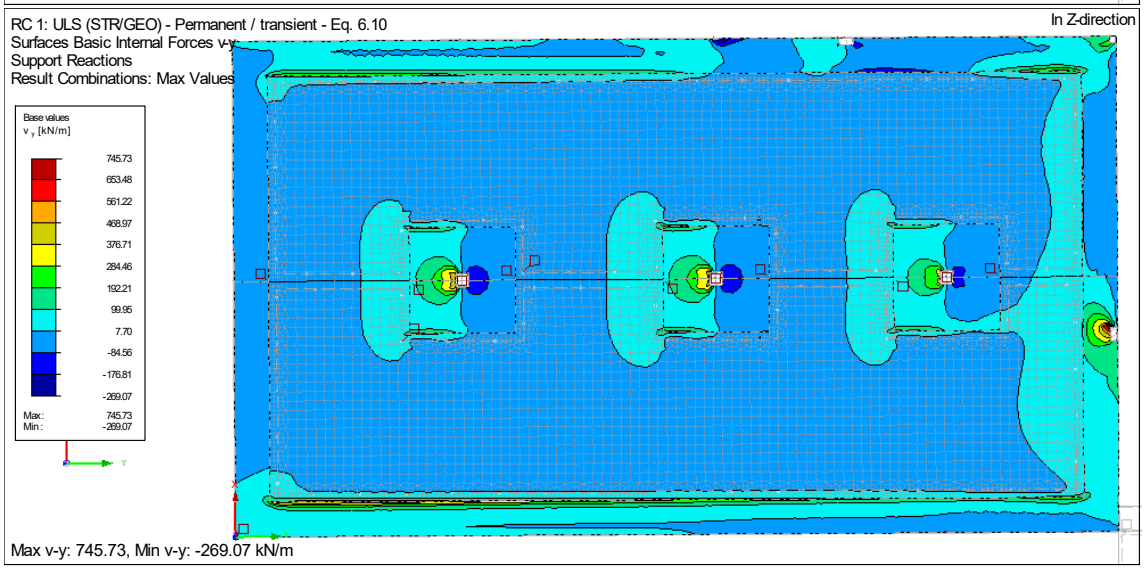

Max v-y: 745.73, Min v-y: -269.07 kN/m

RC 1: ULS (STR/GEO) - Permanent / transient - Eq. 6.10
Surfaces Basic Internal Forces n-x
Support Reactions
Result Combinations: Max Values

In Z-direction

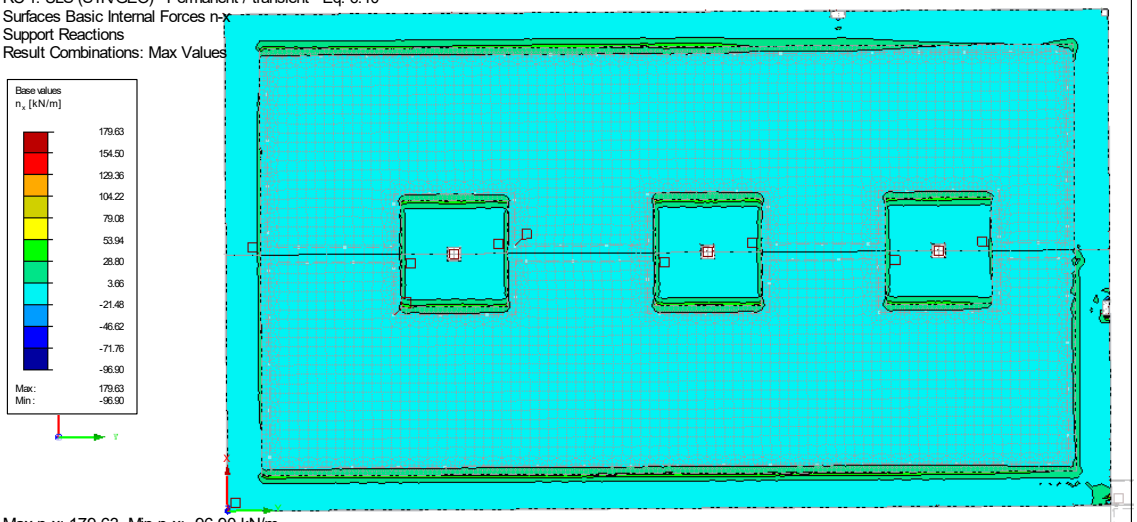

Max n-x: 179.63, Min n-x: -96.90 kN/m

RC 1: ULS (STR/GEO) - Permanent / transient - Eq. 6.10
Surfaces Basic Internal Forces n-y
Members Internal Forces M-y
Support Reactions
Result Combinations: Max Values

In Z-direction

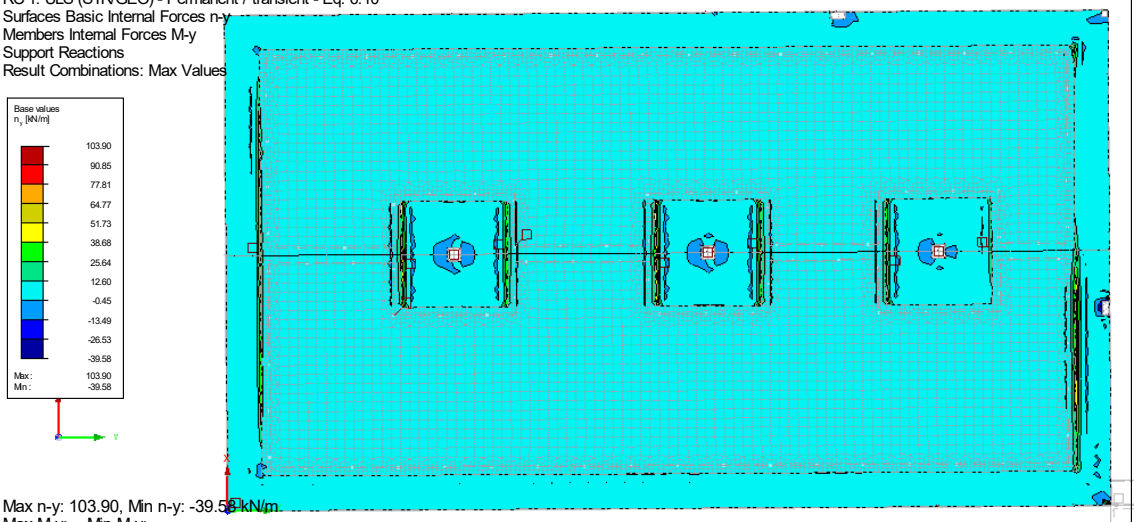

Max n-y: 103.90, Min n-y: -39.58 kN/m
Max M-y: -, Min M-y: -

RC 1: ULS (STR/GEO) - Permanent / transient - Eq. 6.10
Surfaces Basic Internal Forces n-xy
Members Internal Forces M-y
Support Reactions
Result Combinations: Max Values

In Z-direction

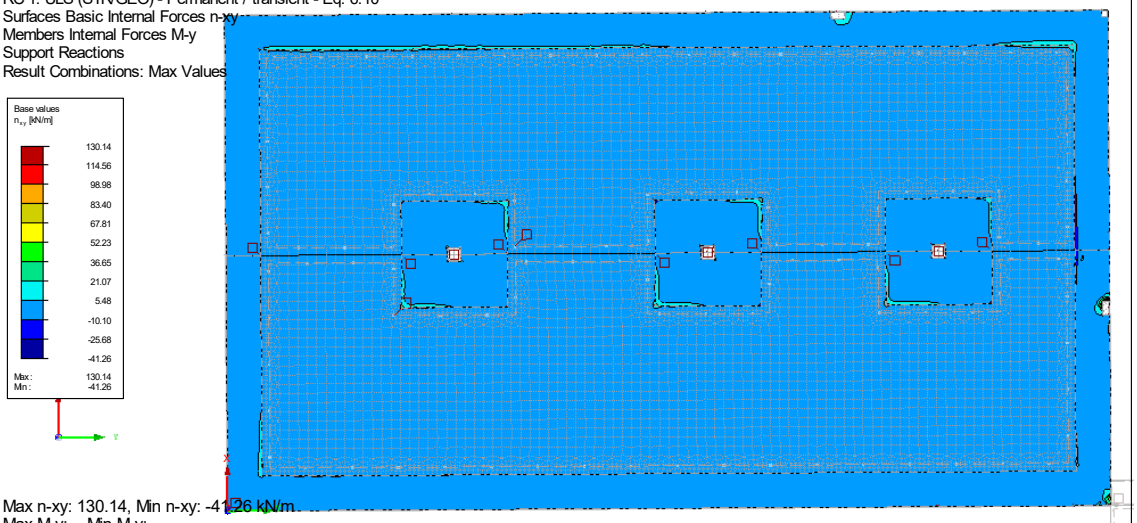

Max n-xy: 130.14, Min n-xy: -41.26 kN/m
Max M-y: -, Min M-y: -

3.8. Lemezalap vasalása

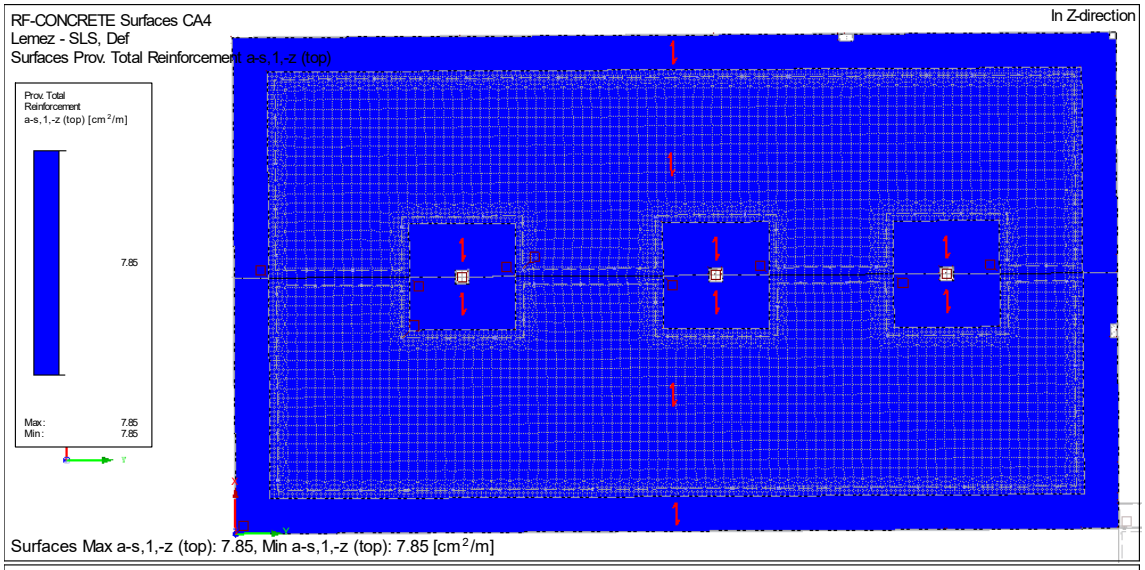

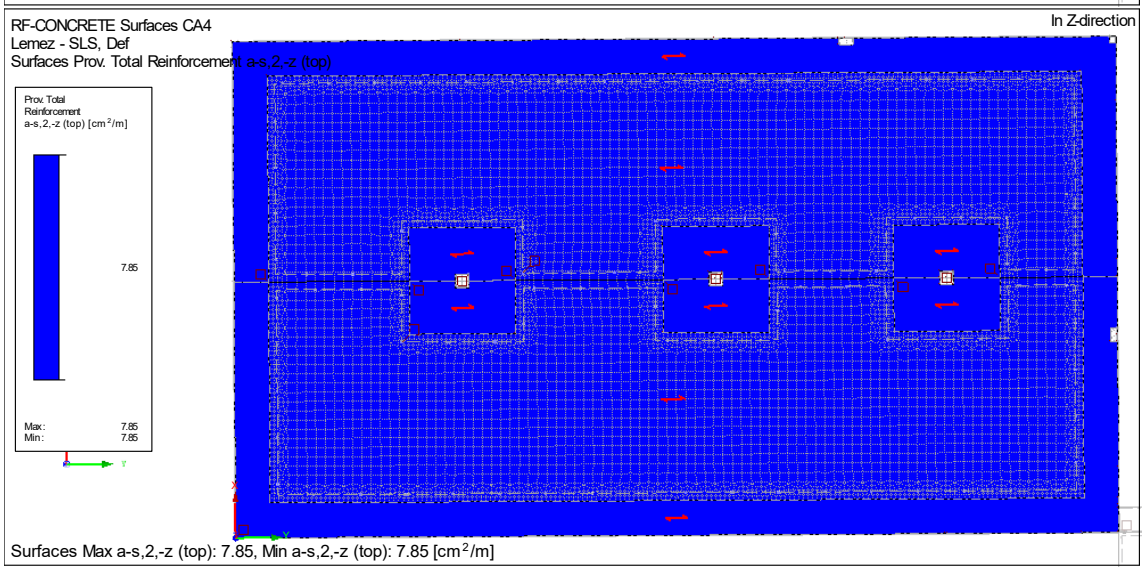

RF-CONCRETE Surfaces CA4
Lemez - SLS, Def
Surfaces Prov. Total Reinforcement a-s,1,+z (bottom)

In Z-direction

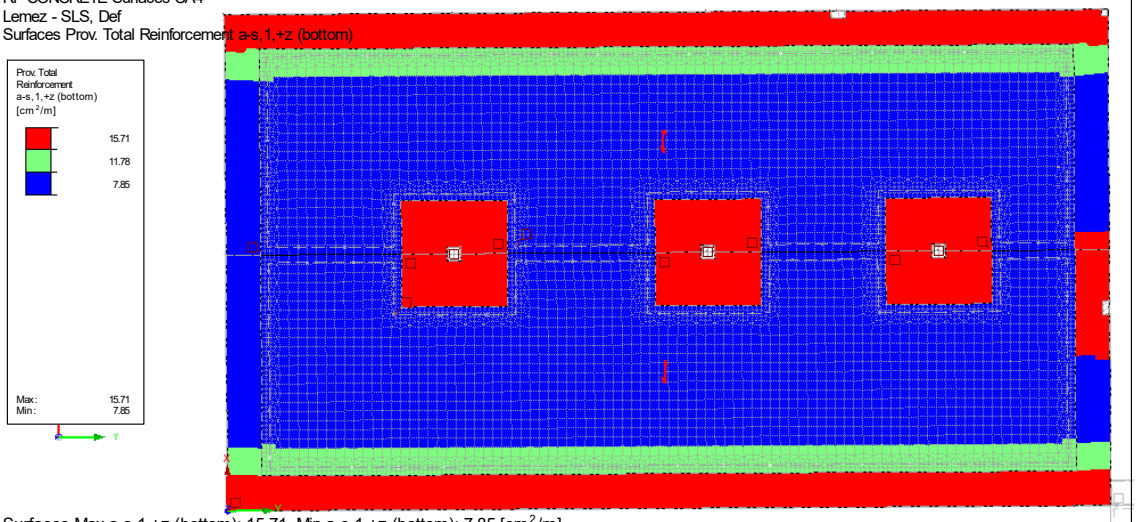

Surfaces Max a-s,1,+z (bottom): 15.71, Min a-s,1,+z (bottom): 7.85 [cm²/m]

RF-CONCRETE Surfaces CA4
Lemez - SLS, Def
Surfaces Prov. Total Reinforcement a-s,2,+z (bottom)

In Z-direction

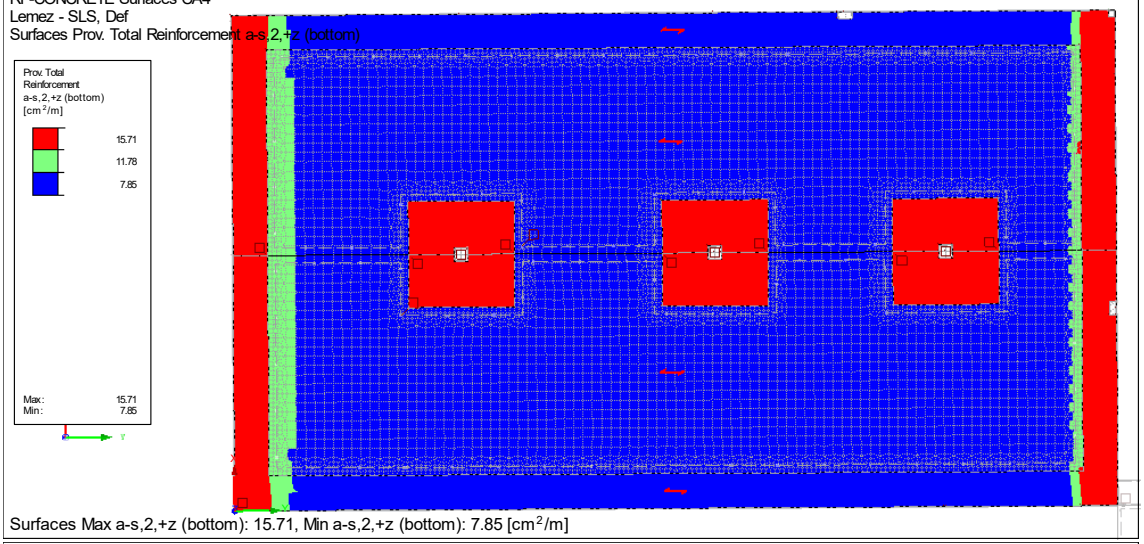

Surfaces Max a-s,2,+z (bottom): 15.71, Min a-s,2,+z (bottom): 7.85 [cm²/m]

RF-CONCRETE Surfaces CA4
Lemez - SLS, Def
Surfaces A-s,req / A-s,prov a-s,1,-z (top)

In Z-direction

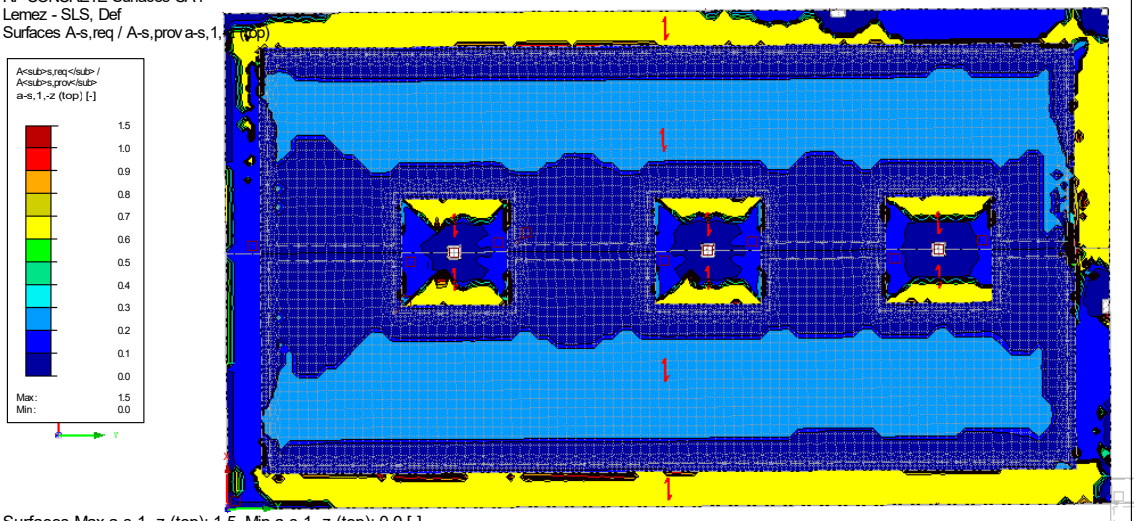

Surfaces Max a-s,1,-z (top): 1.5, Min a-s,1,-z (top): 0.0 [-]

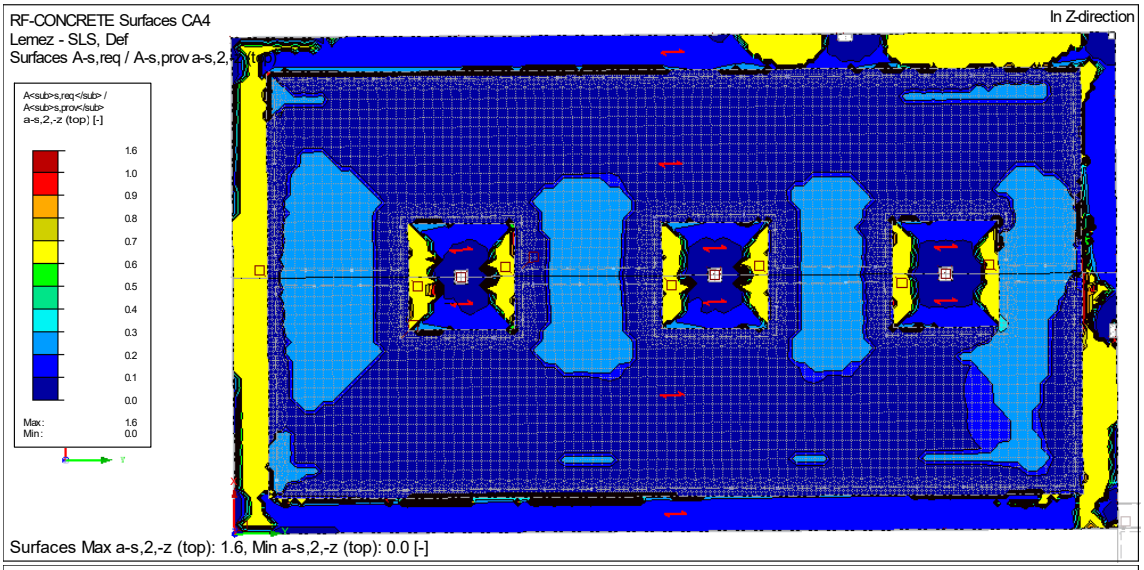

Surfaces Max a-s,2,-z (top): 1.6, Min a-s,2,-z (top): 0.0 [-]

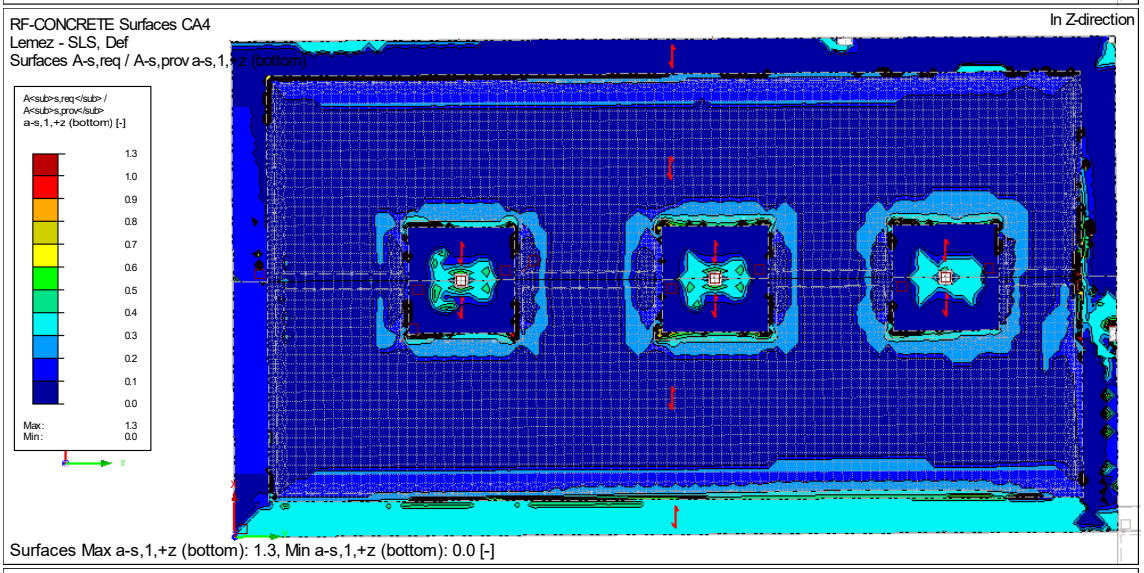

Surfaces Max a-s,1,+z (bottom): 1.3, Min a-s,1,+z (bottom): 0.0 [-]

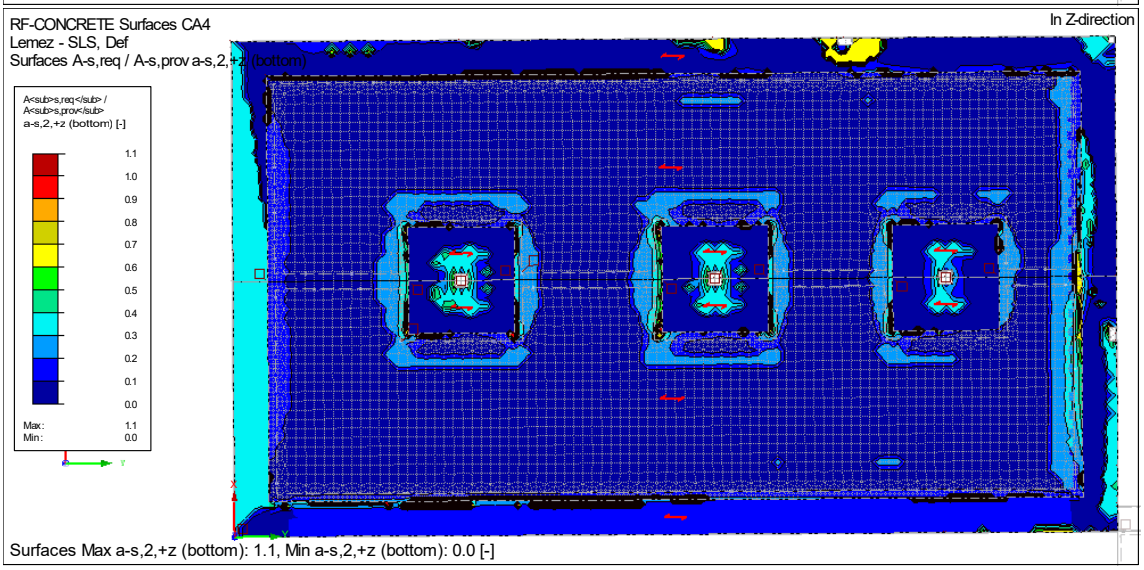

Surfaces Max a-s,2,+z (bottom): 1.1, Min a-s,2,+z (bottom): 0.0 [-]

3.9. Lemezalap átszúródási vizsgálata

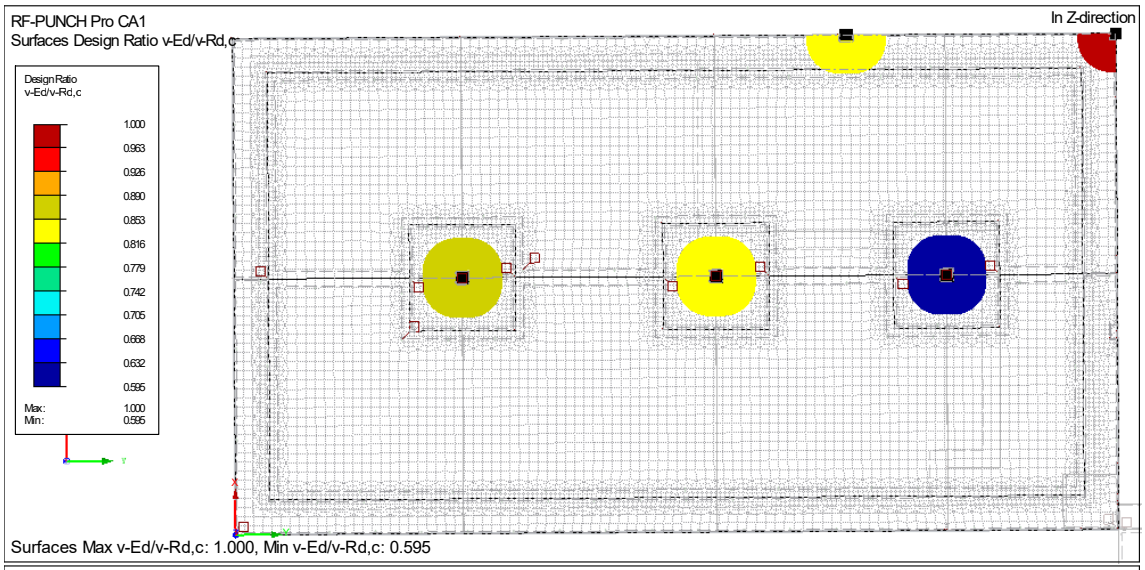

Surfaces Max v-Ed/v-Rd,c: 1.000, Min v-Ed/v-Rd,c: 0.595

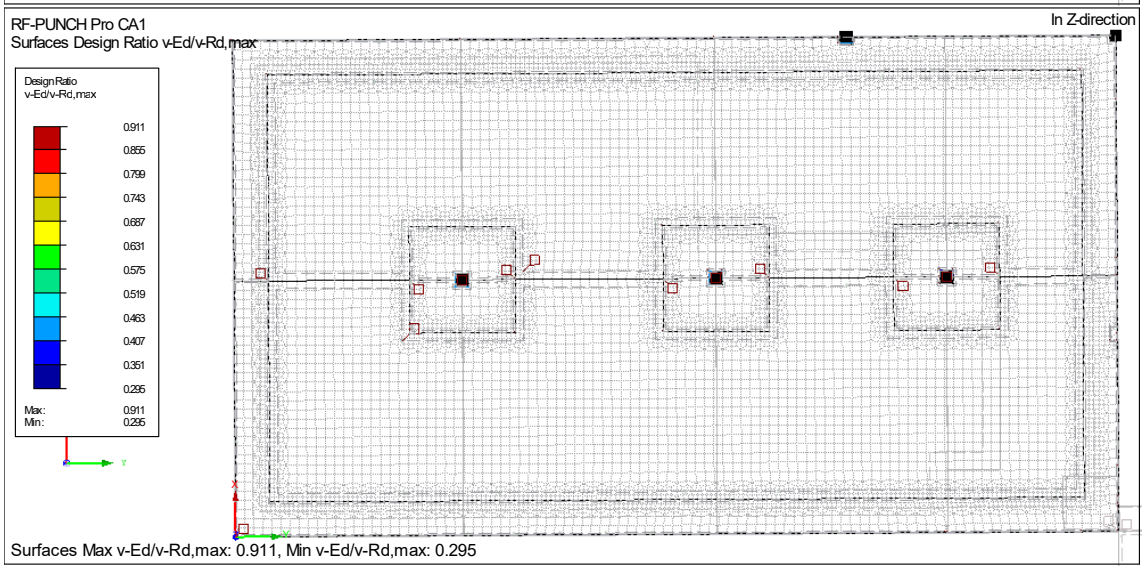

Surfaces Max v-Ed/v-Rd,max: 0.911, Min v-Ed/v-Rd,max: 0.295

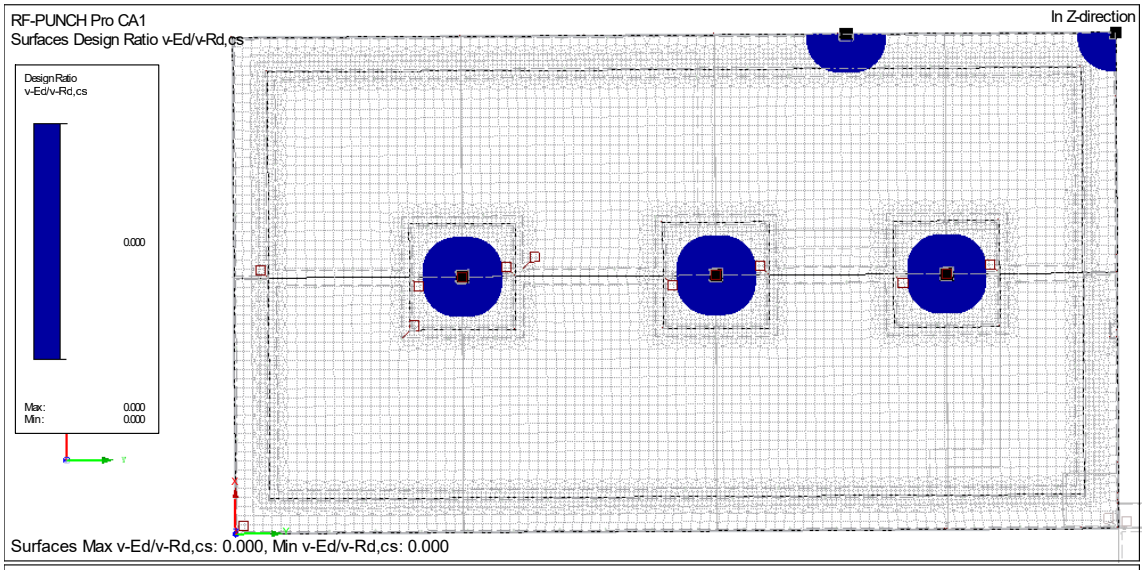

Surfaces Max v-Ed/v-Rd,cs: 0.000, Min v-Ed/v-Rd,cs: 0.000

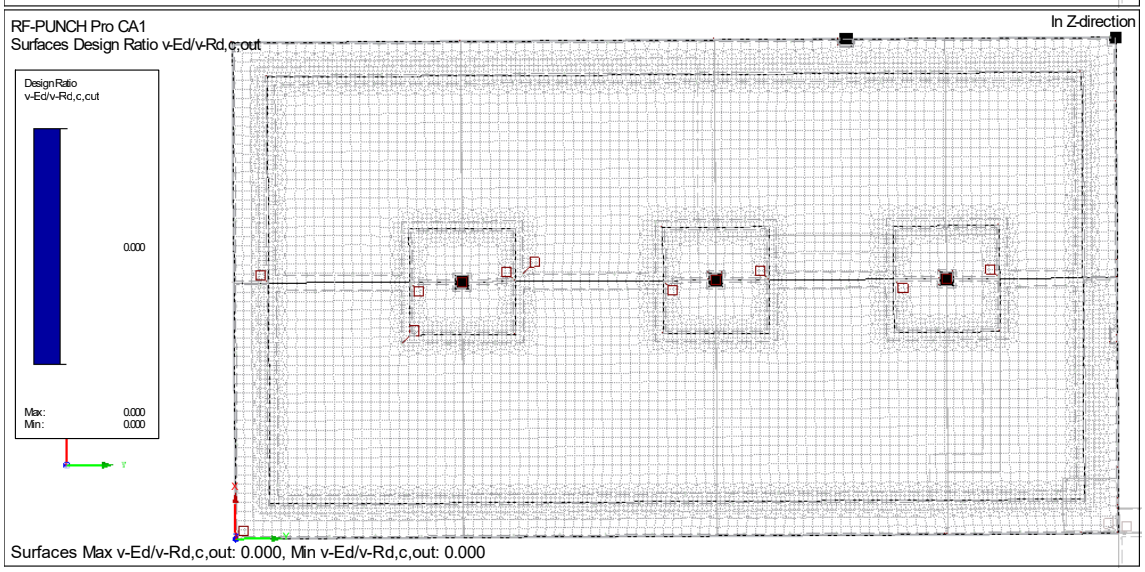

Surfaces Max v-Ed/v-Rd,c,out: 0.000, Min v-Ed/v-Rd,c,out: 0.000

3.10. Felületi igénybevételek - Falak

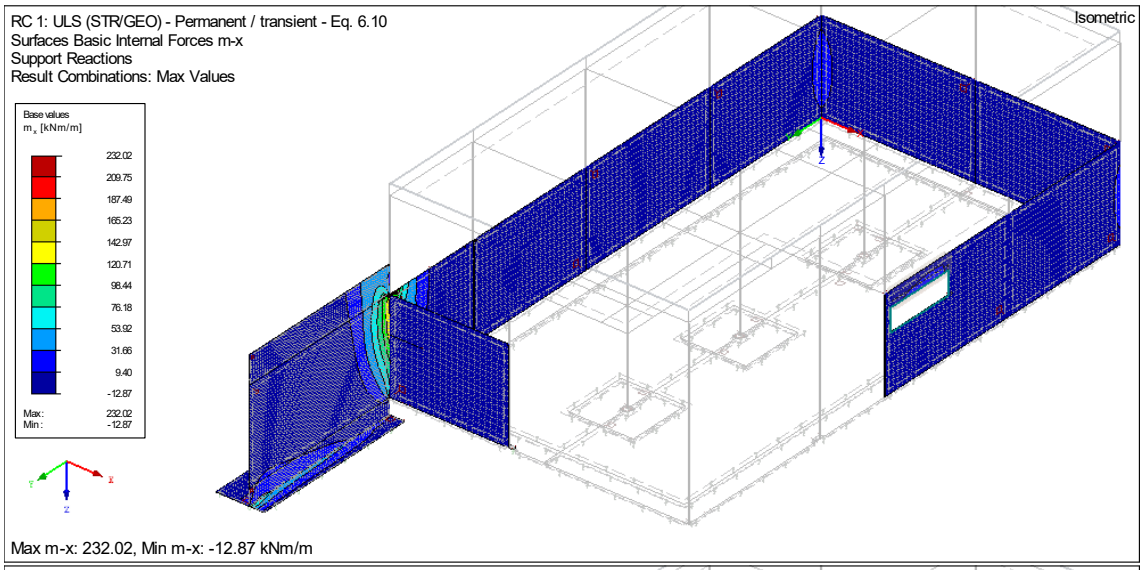

Max m-x: 232.02, Min m-x: -12.87 kNm/m

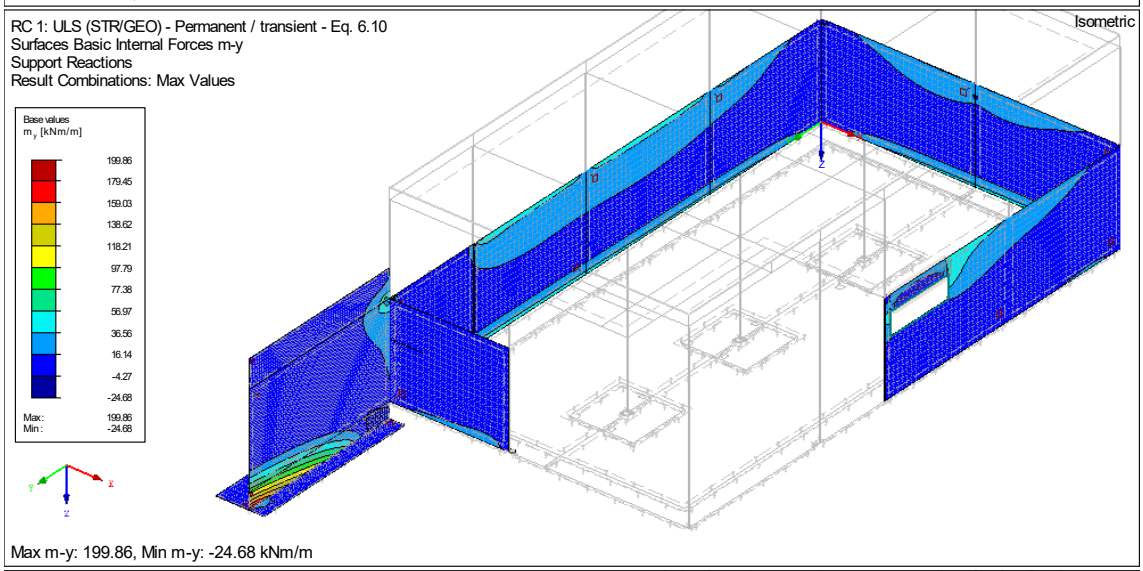

Max m-y: 199.86, Min m-y: -24.68 kNm/m

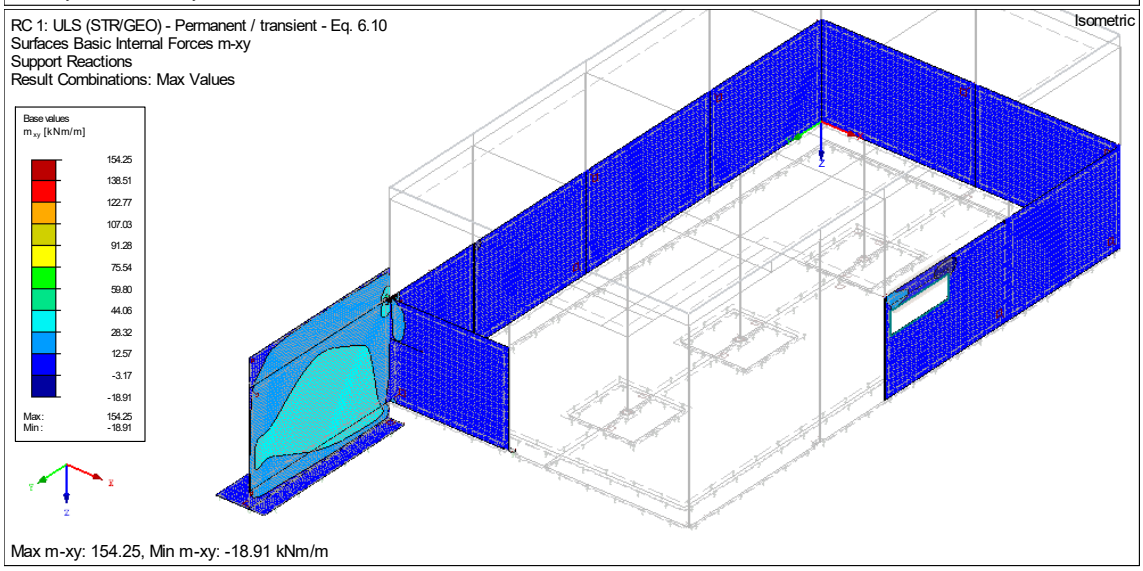

Max m-xy: 154.25, Min m-xy: -18.91 kNm/m

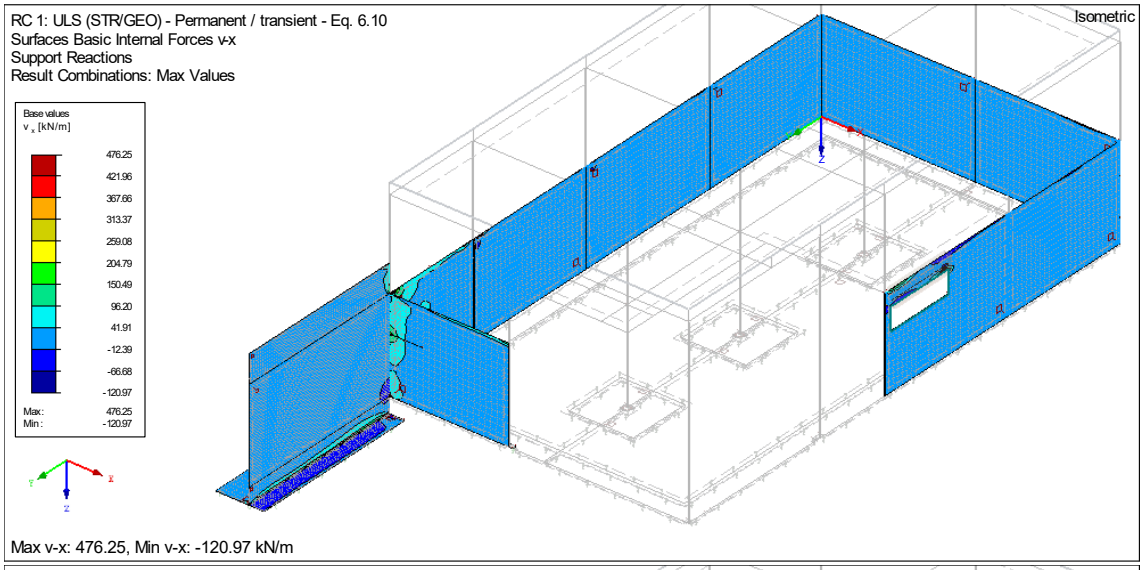

Max v-x: 476.25, Min v-x: -120.97 kN/m

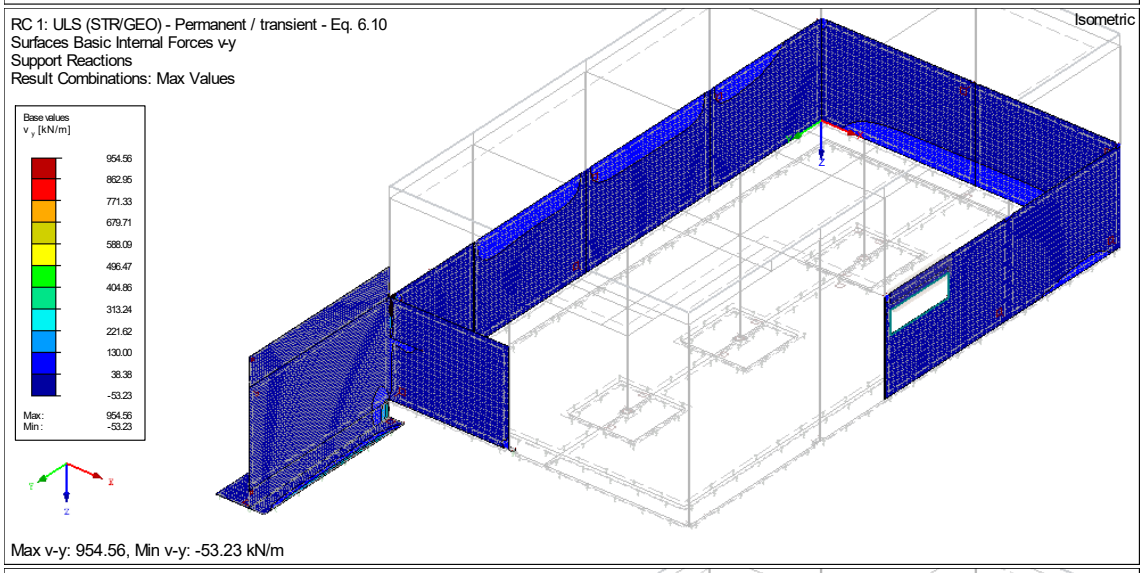

Max v-y: 954.56, Min v-y: -53.23 kN/m

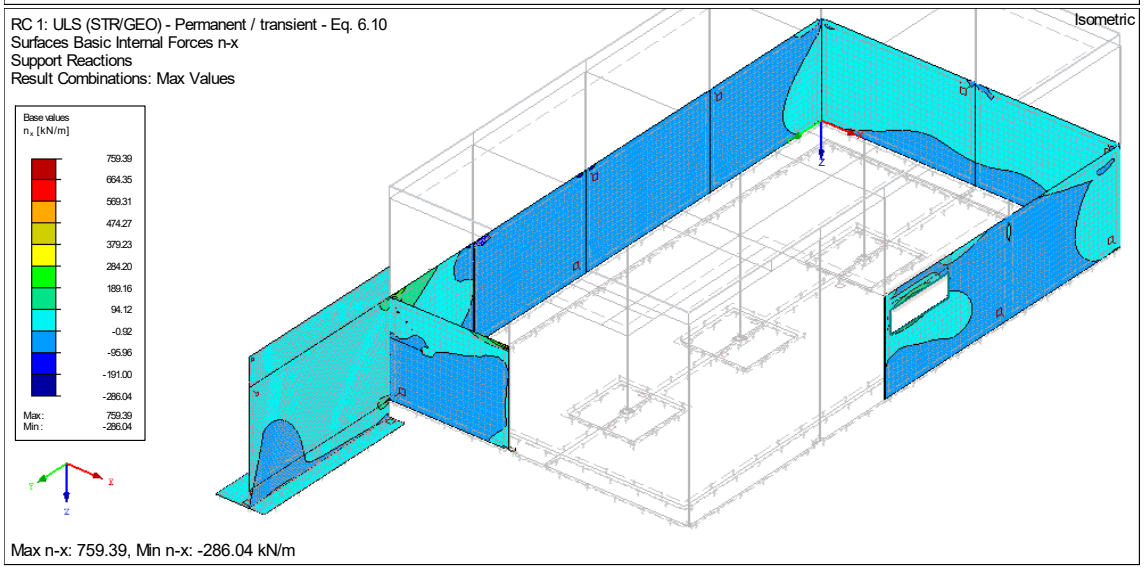

Max n-x: 759.39, Min n-x: -286.04 kN/m

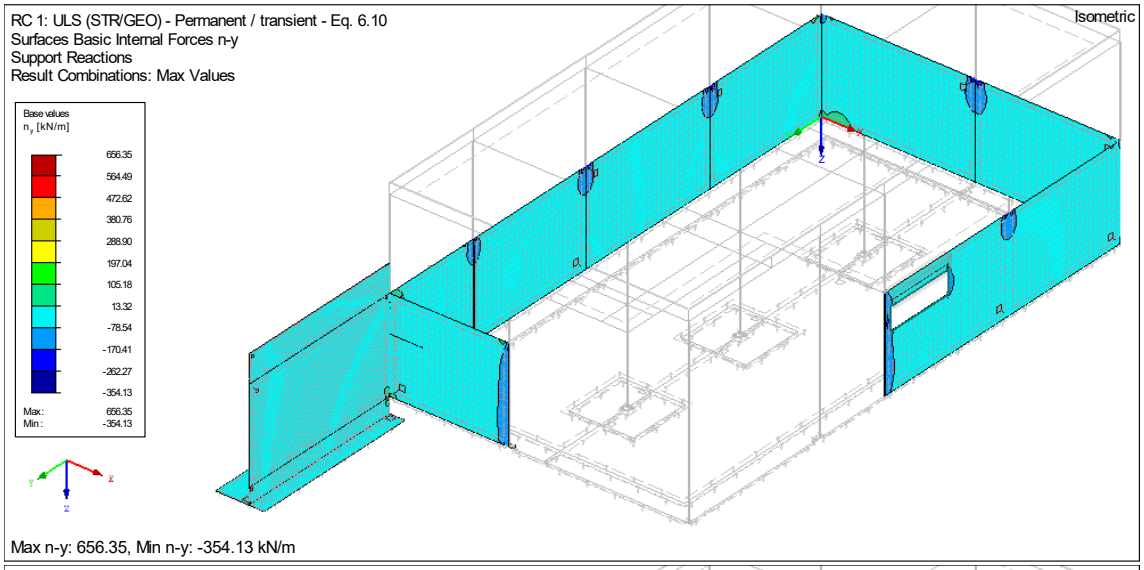

Max n-y: 656.35, Min n-y: -354.13 kN/m

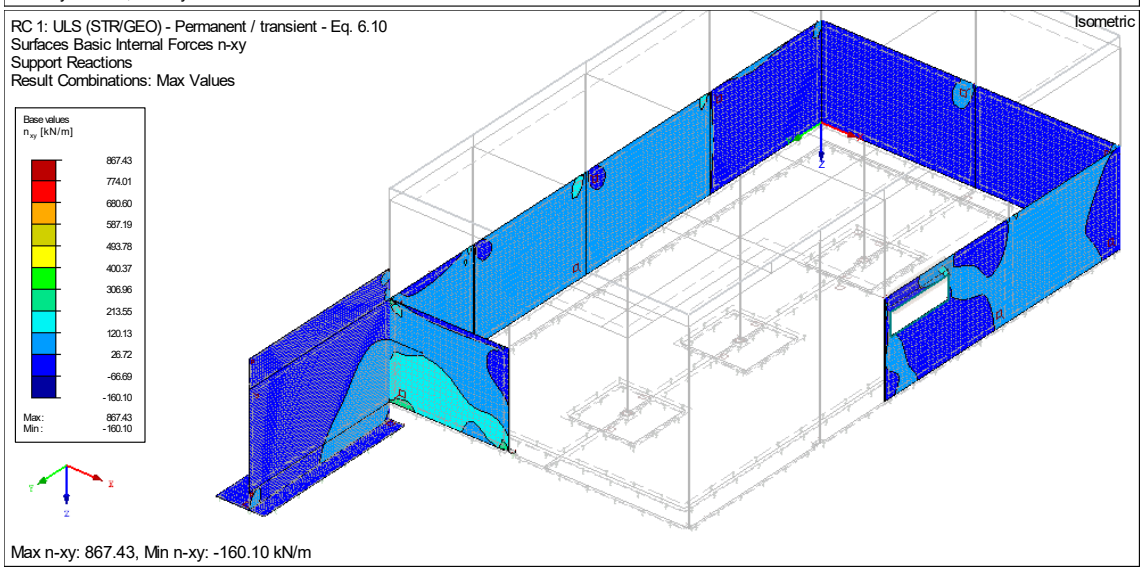

Max n-xy: 867.43, Min n-xy: -160.10 kN/m

3.11. Vasbeton fal vasalása

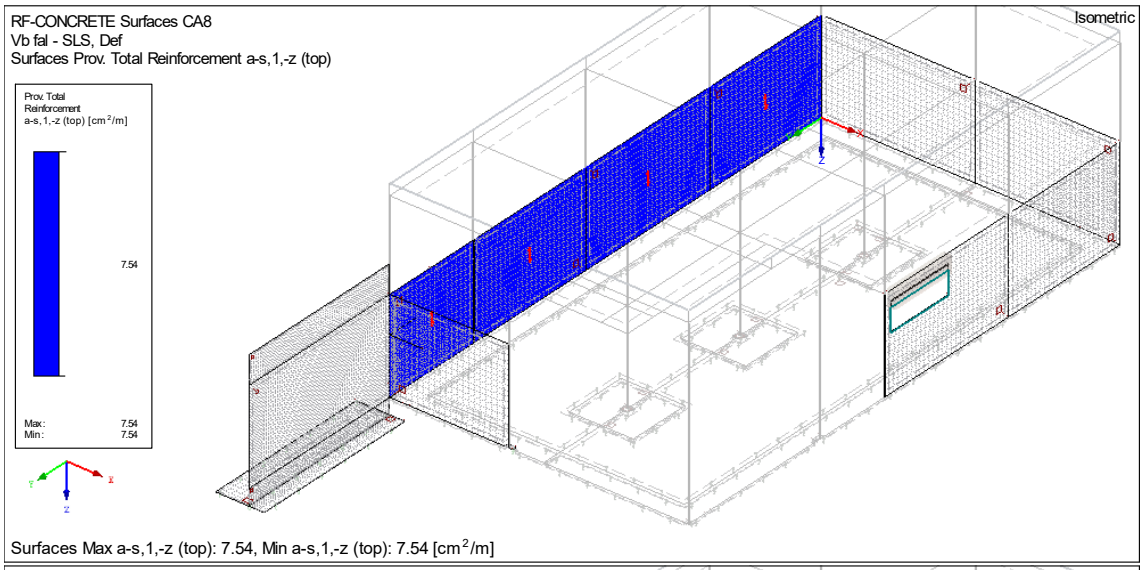

Surfaces Max a-s,1,-z (top): 7.54, Min a-s,1,-z (top): 7.54 [cm²/m]

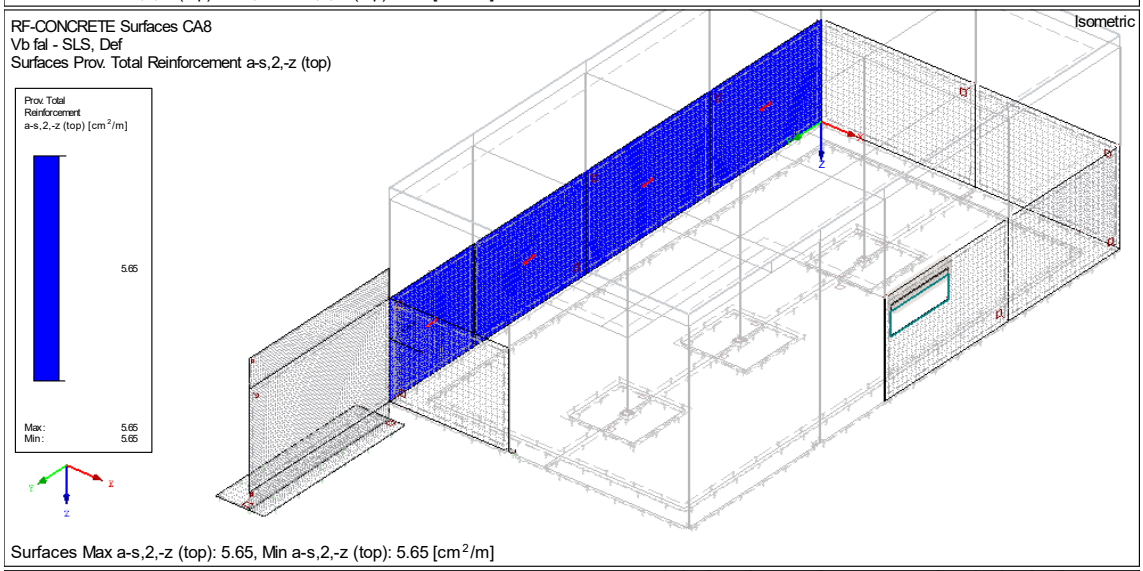

Surfaces Max a-s,2,-z (top): 5.65, Min a-s,2,-z (top): 5.65 [cm²/m]

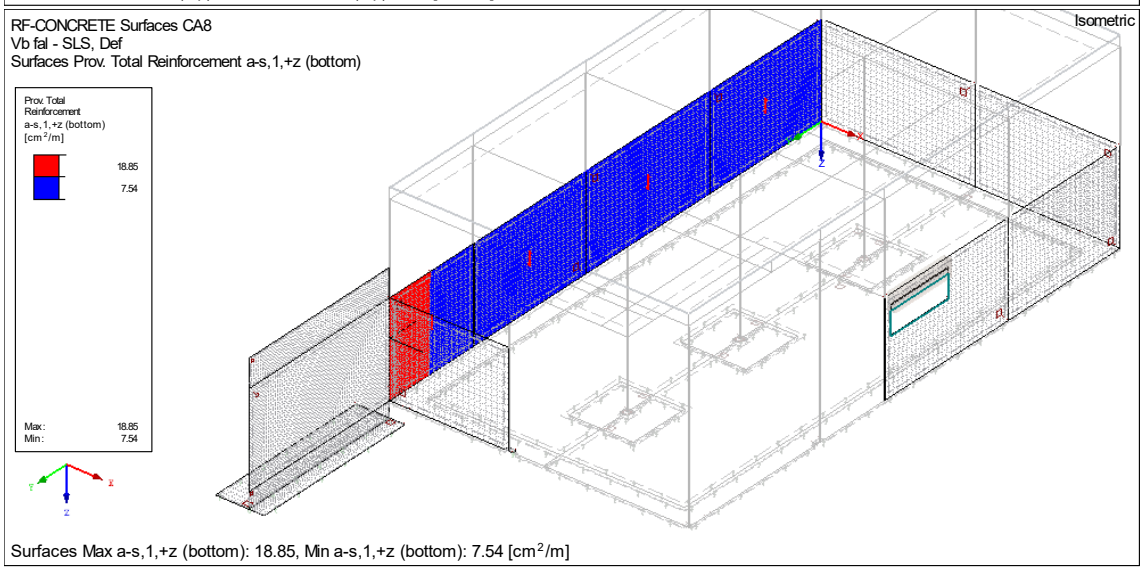

Surfaces Max a-s,1,+z (bottom): 18.85, Min a-s,1,+z (bottom): 7.54 [cm²/m]

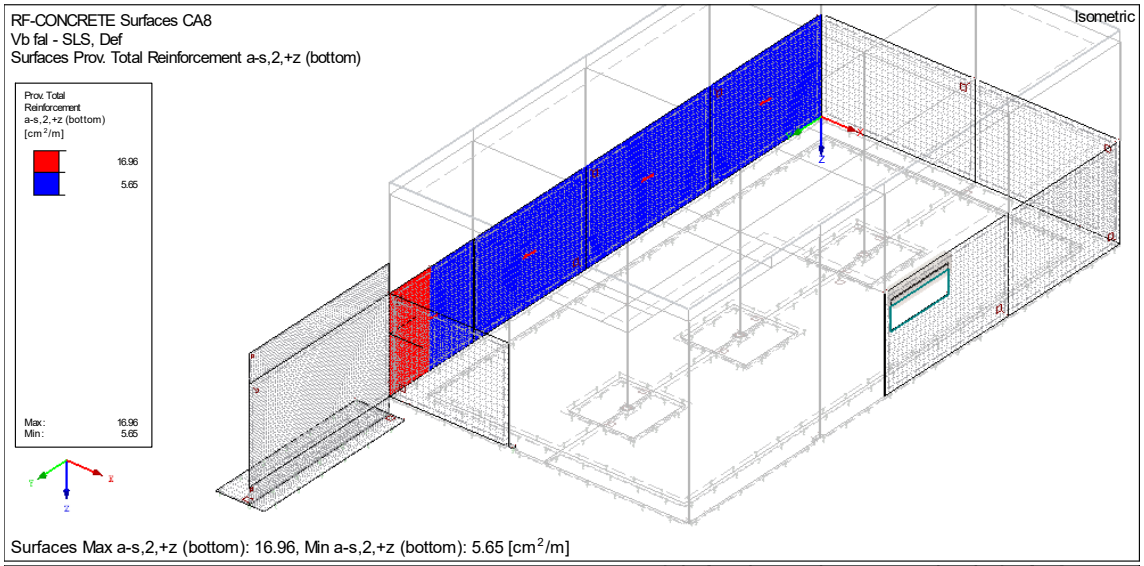

Surfaces Max a-s,2,+z (bottom): 16.96, Min a-s,2,+z (bottom): 5.65 [cm^2/m]

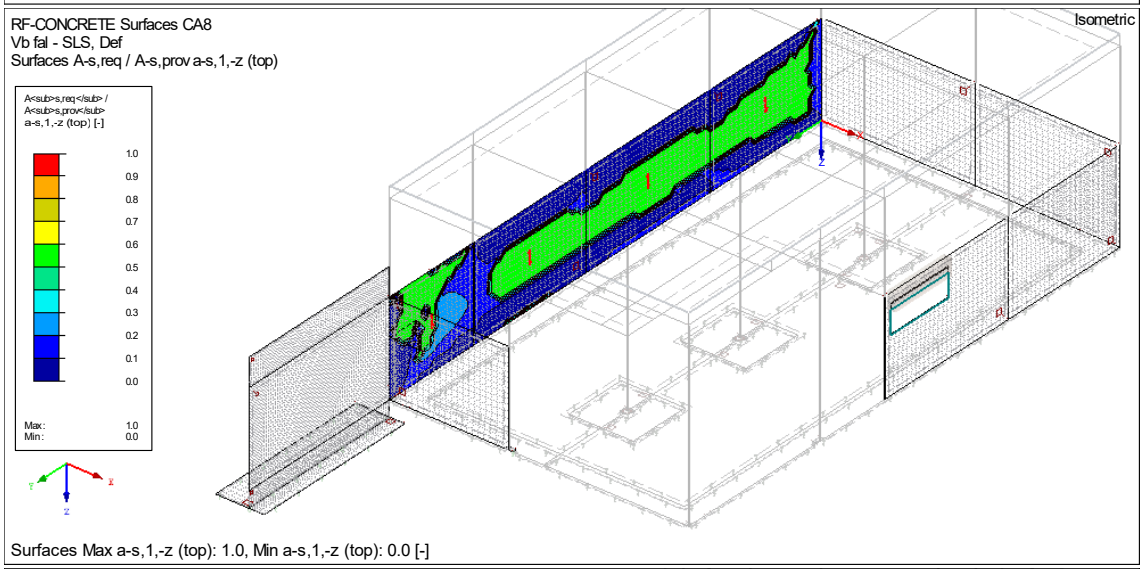

Surfaces Max a-s,1,-z (top): 1.0, Min a-s,1,-z (top): 0.0 [-]

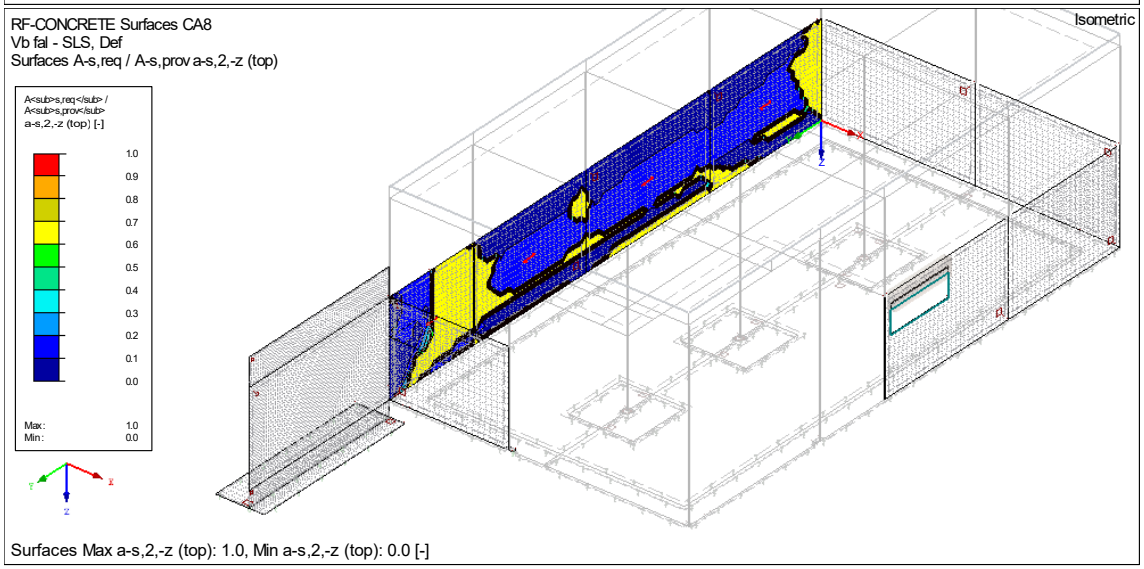

Surfaces Max a-s,2,-z (top): 1.0, Min a-s,2,-z (top): 0.0 [-]

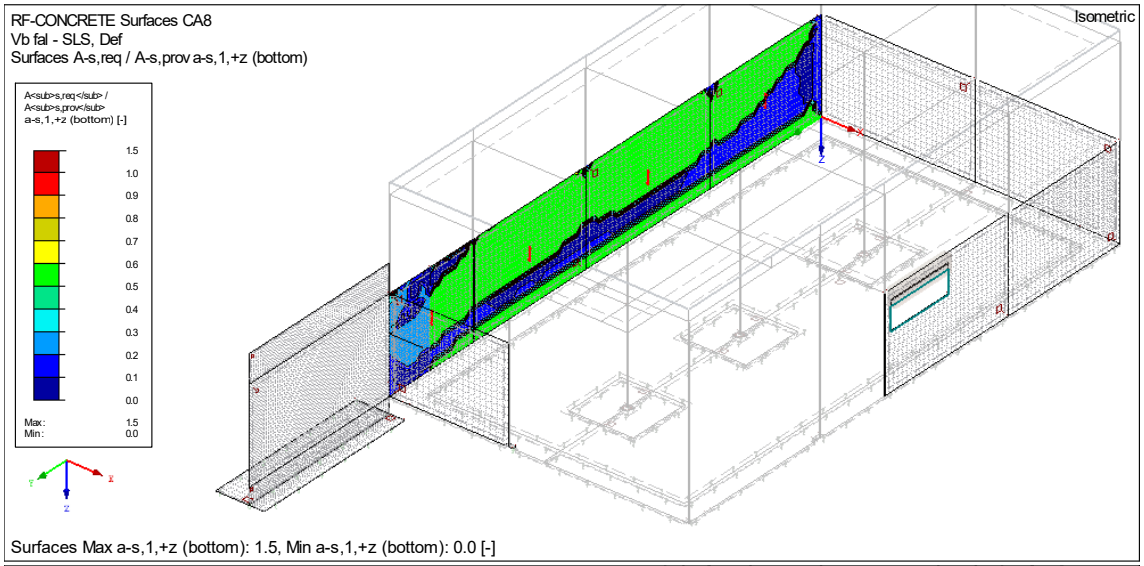

Surfaces Max a-s,1,+z (bottom): 1.5, Min a-s,1,+z (bottom): 0.0 [-]

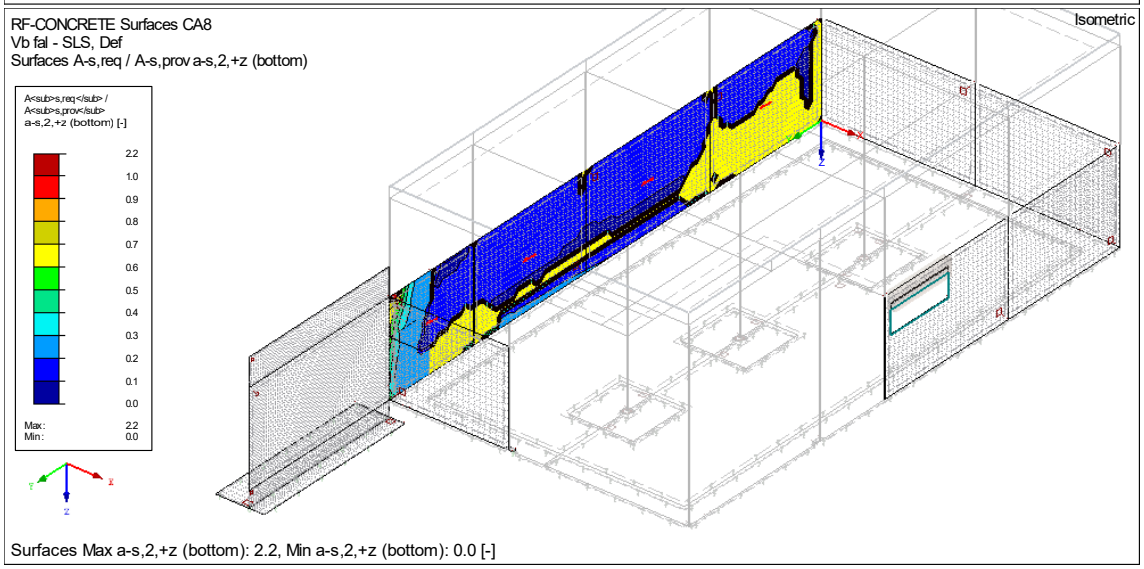

Surfaces Max a-s,2,+z (bottom): 2.2, Min a-s,2,+z (bottom): 0.0 [-]

3.12. Támfal vasalása

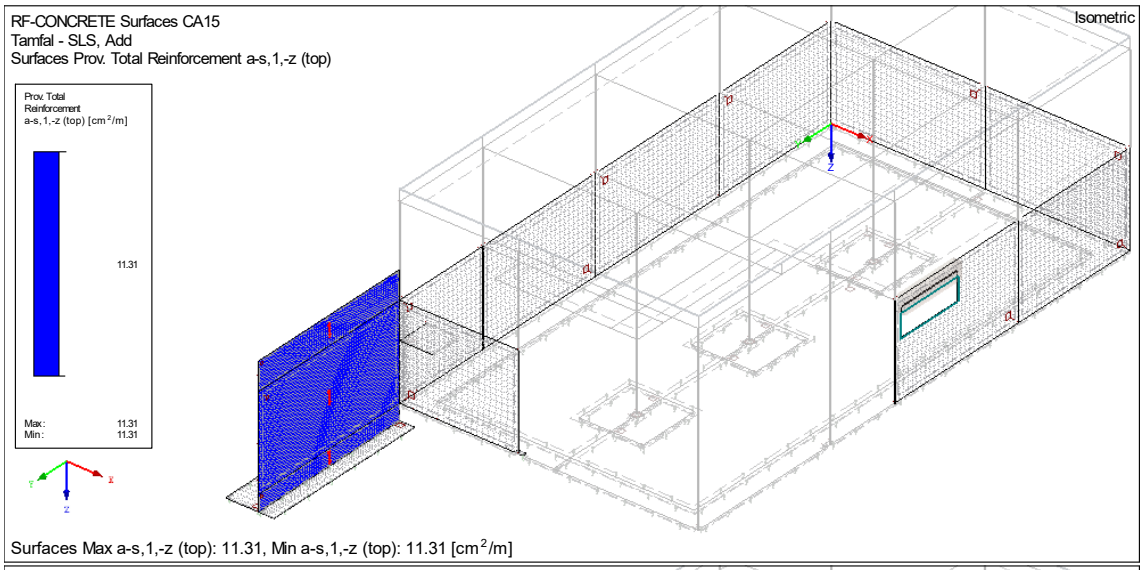

Surfaces Max a-s,1,-z (top): 11.31, Min a-s,1,-z (top): 11.31 [cm²/m]

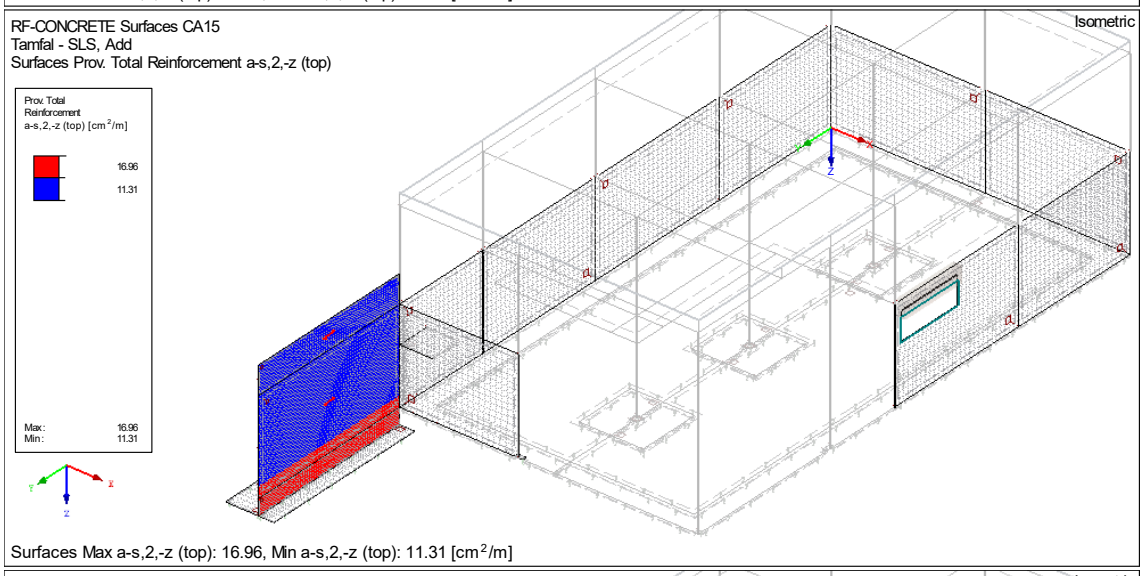

Surfaces Max a-s,2,-z (top): 16.96, Min a-s,2,-z (top): 11.31 [cm²/m]

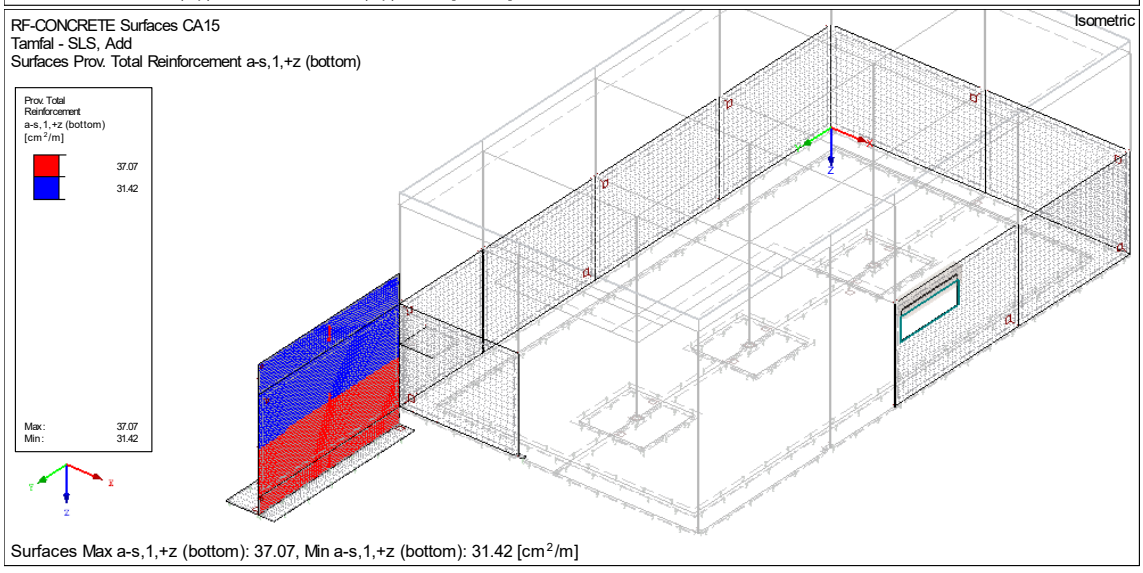

Surfaces Max a-s,1,+z (bottom): 37.07, Min a-s,1,+z (bottom): 31.42 [cm²/m]

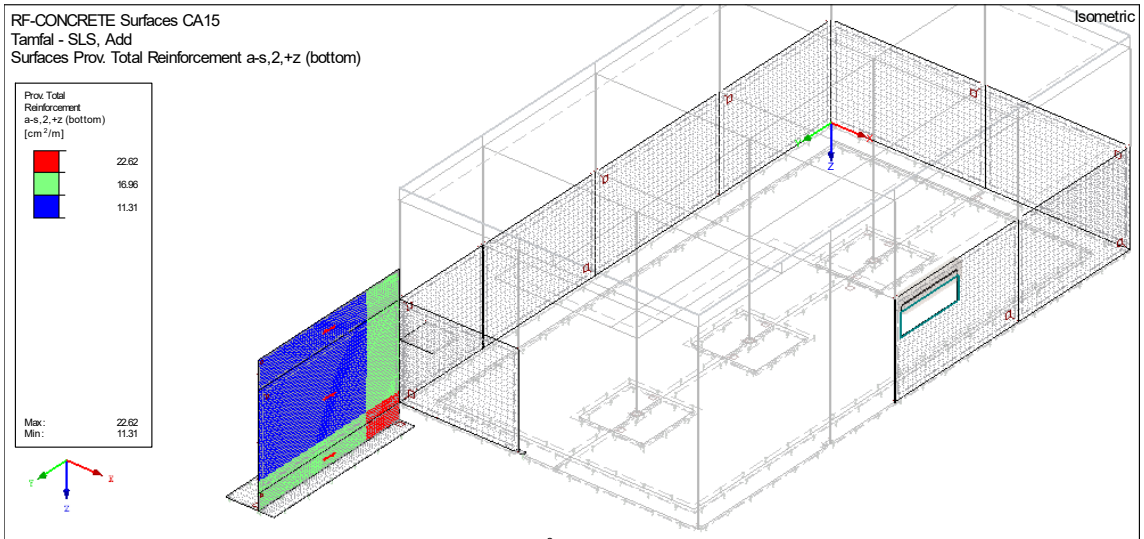

Surfaces Max a-s,2,+z (bottom): 22.62, Min a-s,2,+z (bottom): 11.31 [cm^2/m]

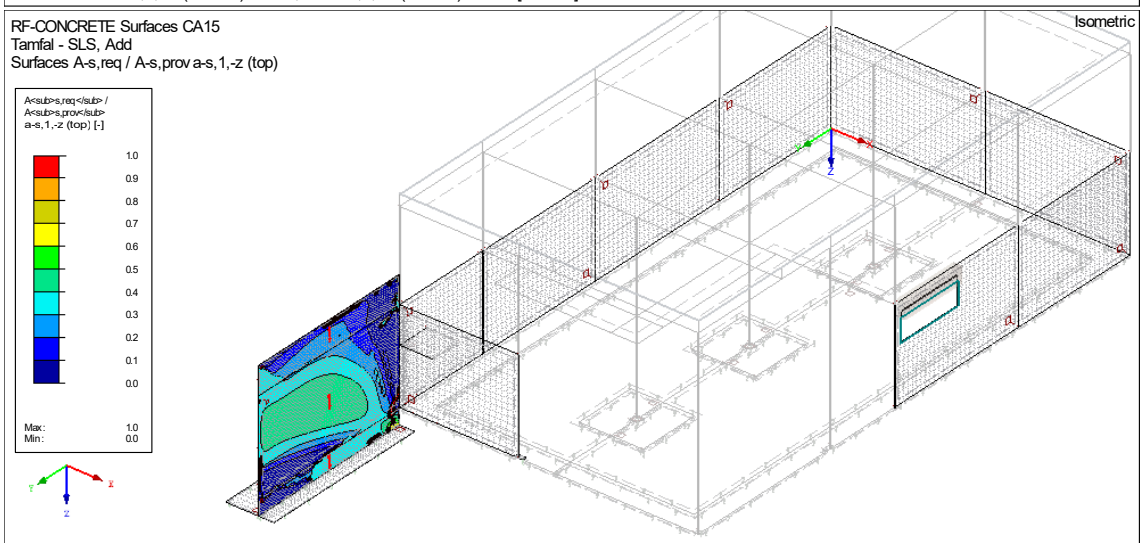

Surfaces Max a-s,1,-z (top): 1.0, Min a-s,1,-z (top): 0.0 [-]

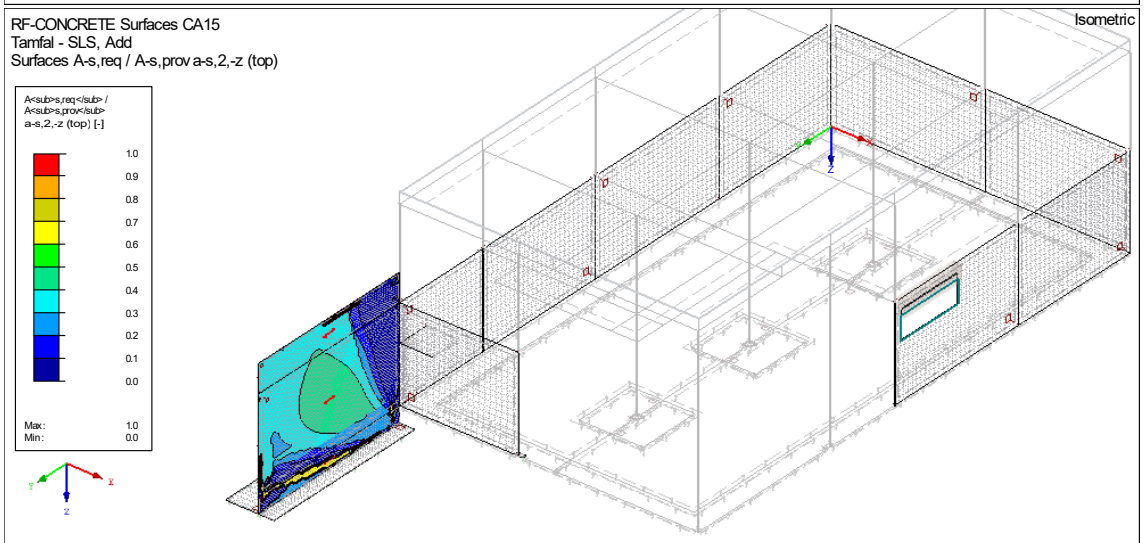

Surfaces Max a-s,2,-z (top): 1.0, Min a-s,2,-z (top): 0.0 [-]

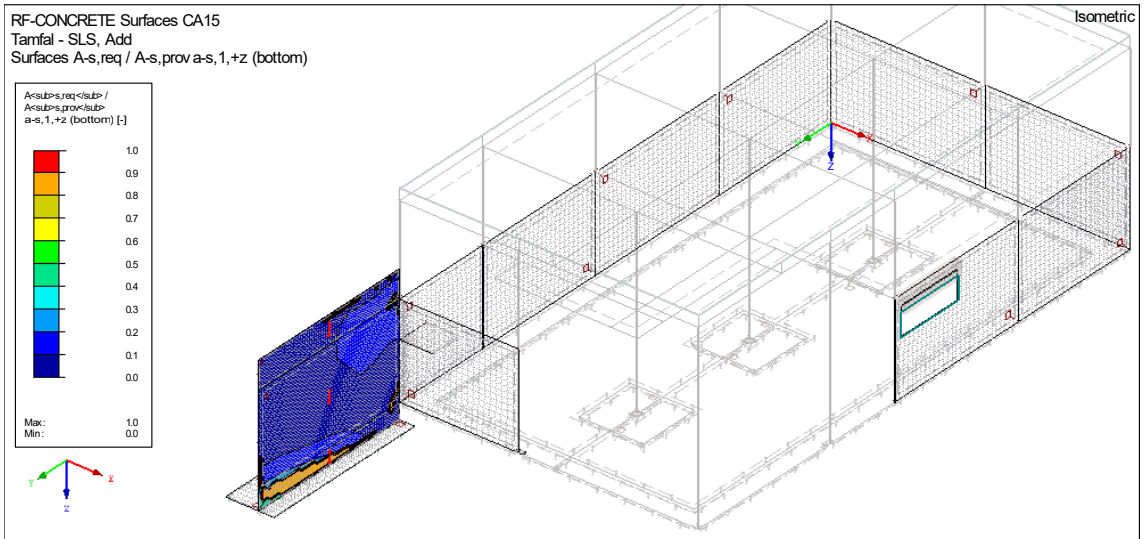

Surfaces Max a-s,1,+z (bottom): 1.0, Min a-s,1,+z (bottom): 0.0 [-]

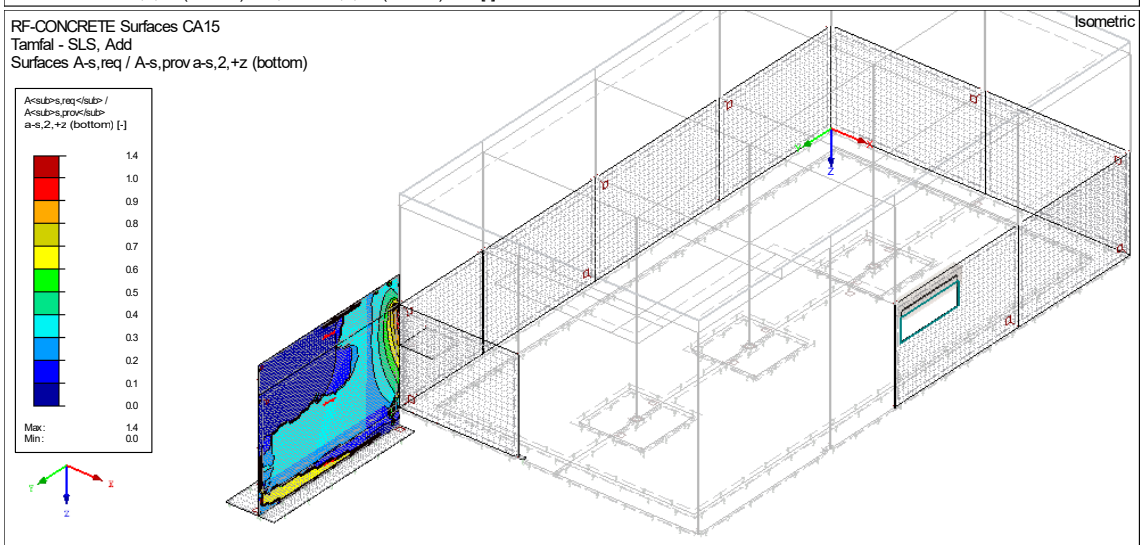

Surfaces Max a-s,2,+z (bottom): 1.4, Min a-s,2,+z (bottom): 0.0 [-]

3.13. Zsalukőfal vasalása

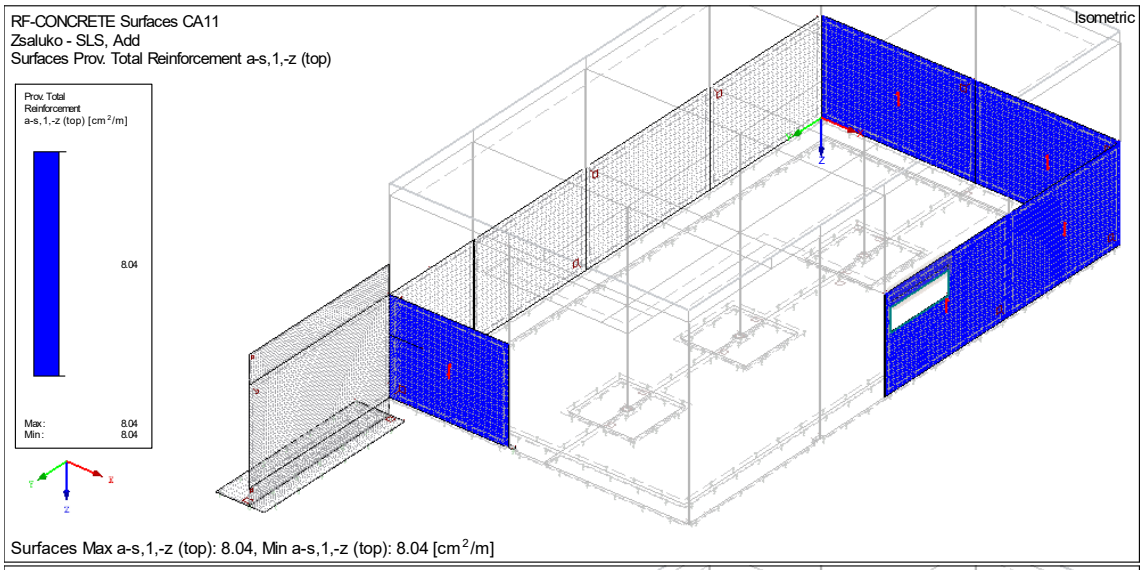

Surfaces Max a-s,1,-z (top): 8.04, Min a-s,1,-z (top): 8.04 [cm^2/m]

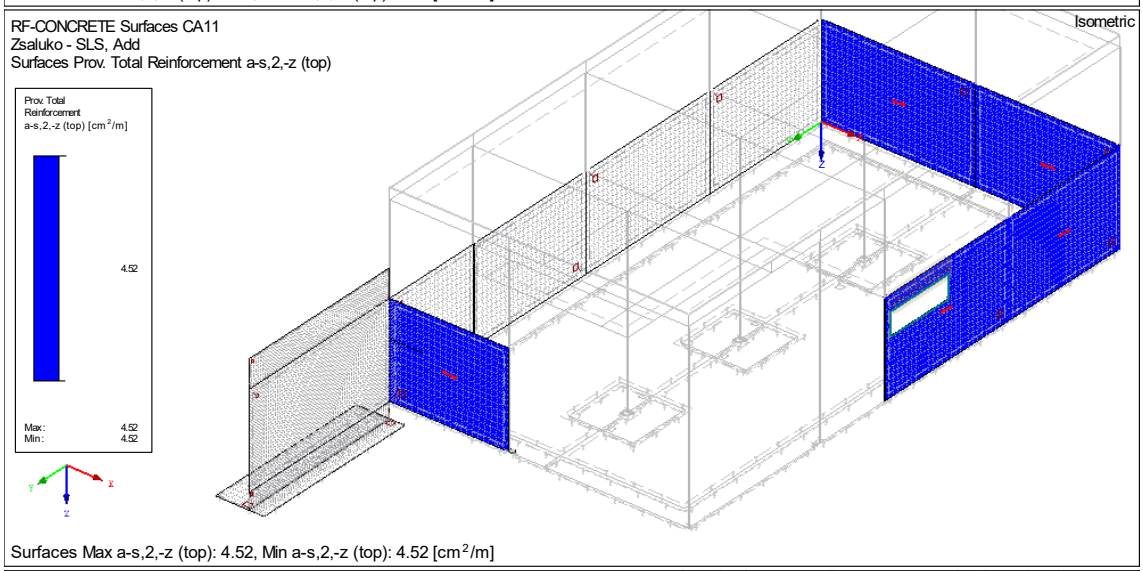

Surfaces Max a-s,2,-z (top): 4.52, Min a-s,2,-z (top): 4.52 [cm^2/m]

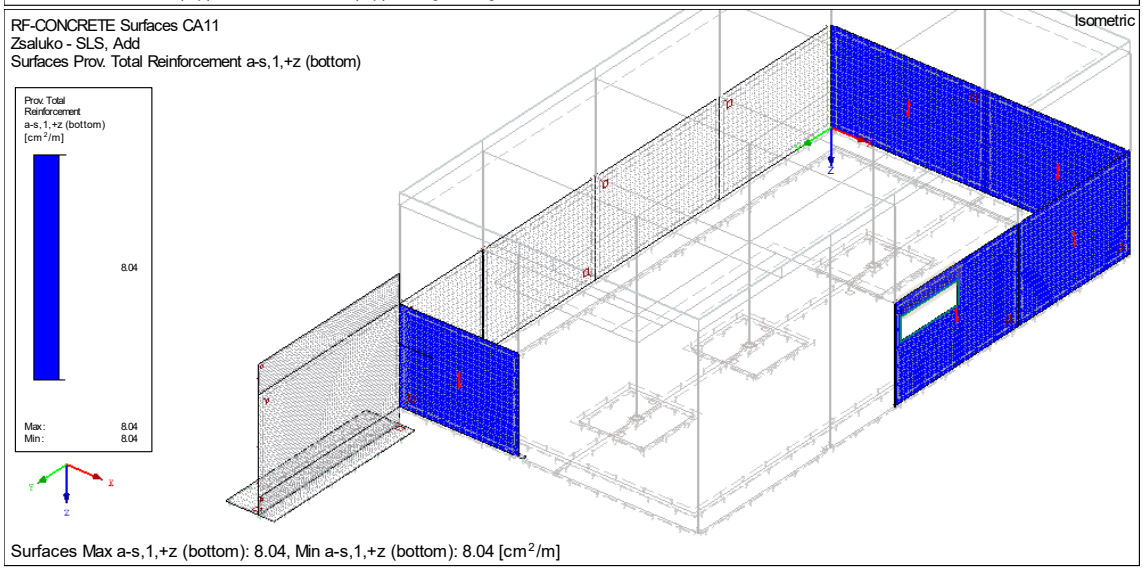

Surfaces Max a-s,1,+z (bottom): 8.04, Min a-s,1,+z (bottom): 8.04 [cm^2/m]

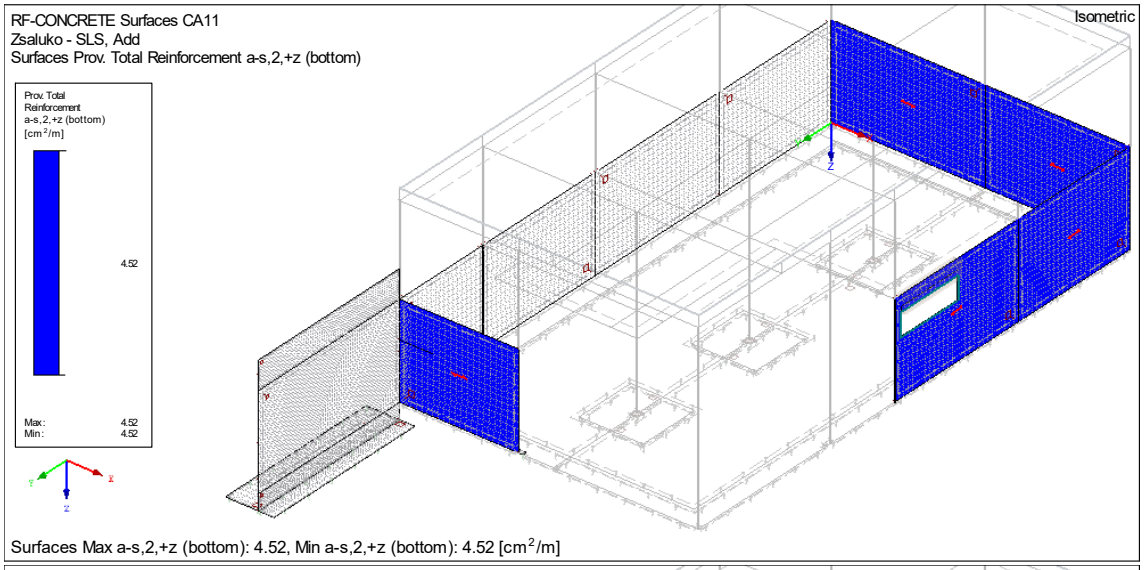

Surfaces Max a-s,2,+z (bottom): 4.52, Min a-s,2,+z (bottom): 4.52 [cm^2/m]

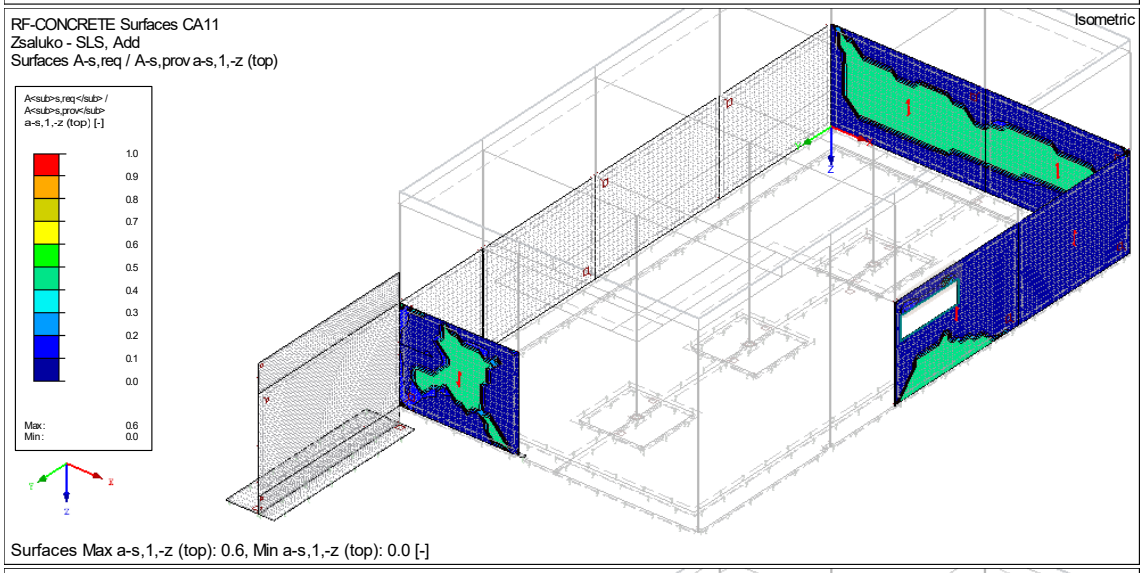

Surfaces Max a-s,1,-z (top): 0.6, Min a-s,1,-z (top): 0.0 [-]

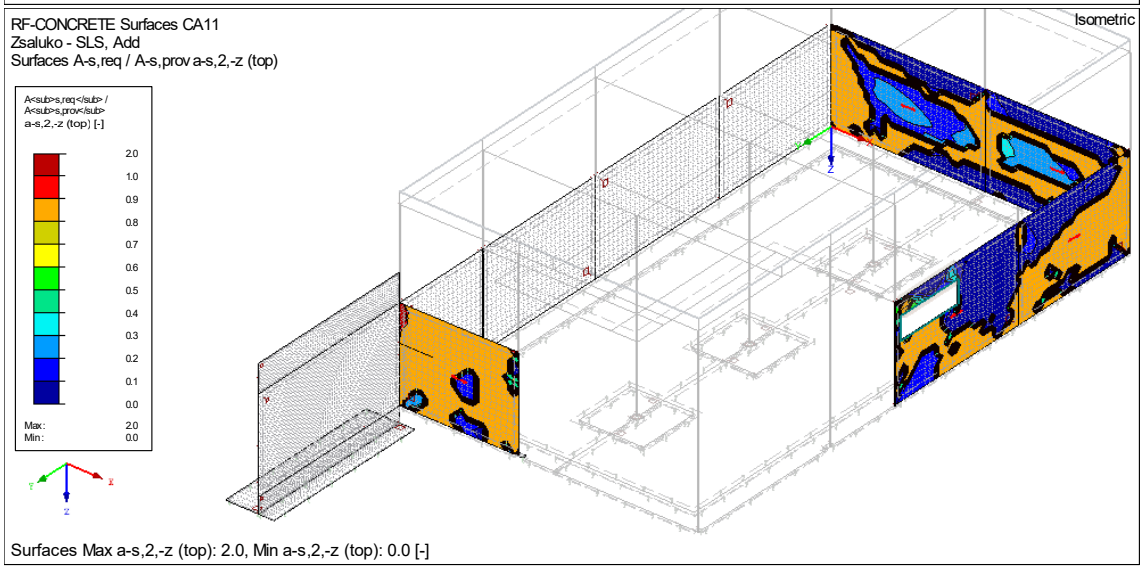

Surfaces Max a-s,2,-z (top): 2.0, Min a-s,2,-z (top): 0.0 [-]

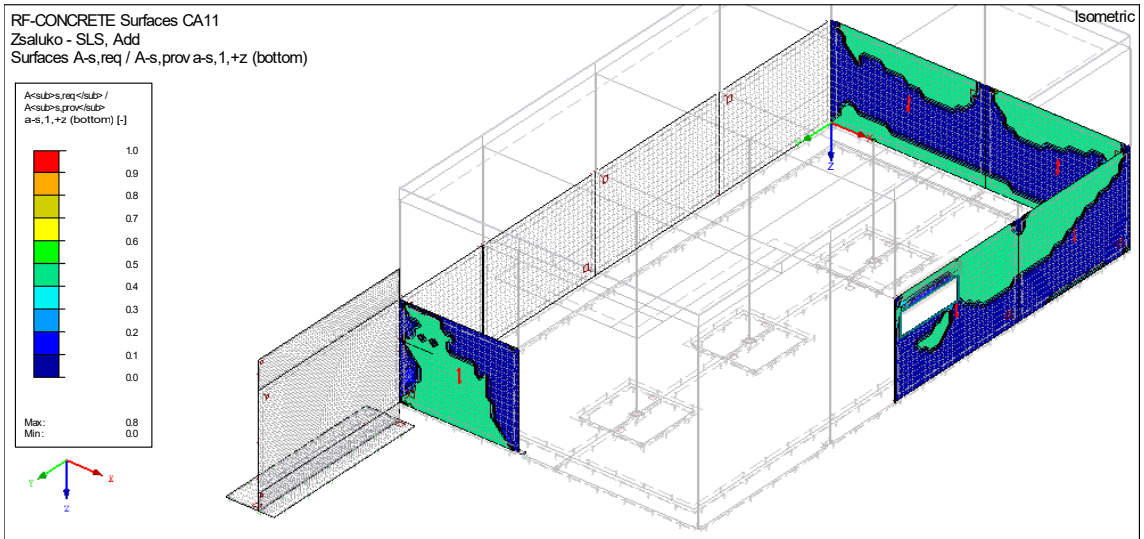

Surfaces Max a-s,1,+z (bottom): 0.8, Min a-s,1,+z (bottom): 0.0 [-]

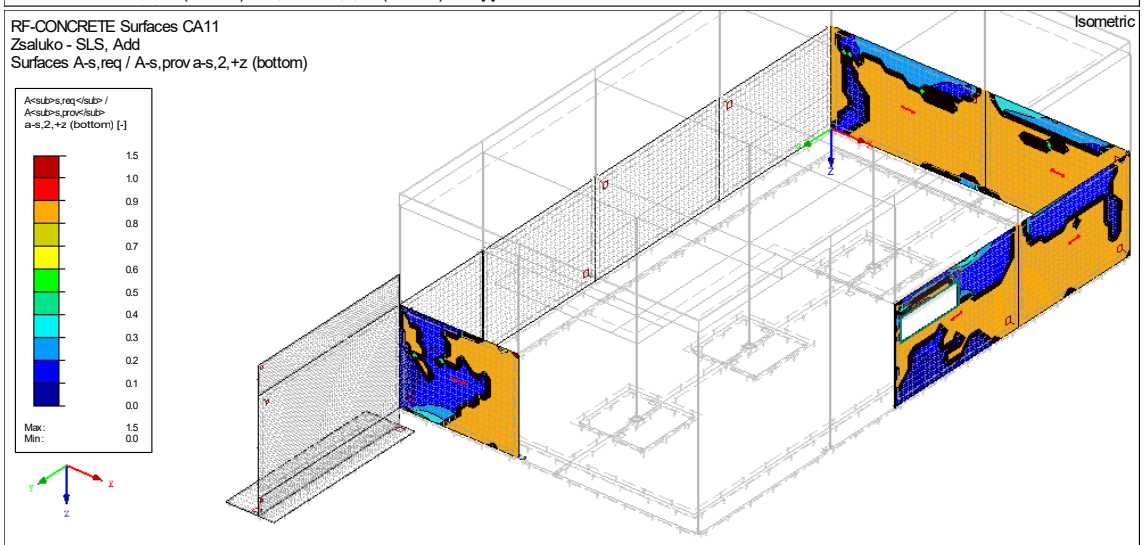

Surfaces Max a-s,2,+z (bottom): 1.5, Min a-s,2,+z (bottom): 0.0 [-]

3.14. Rudak igénybevételei

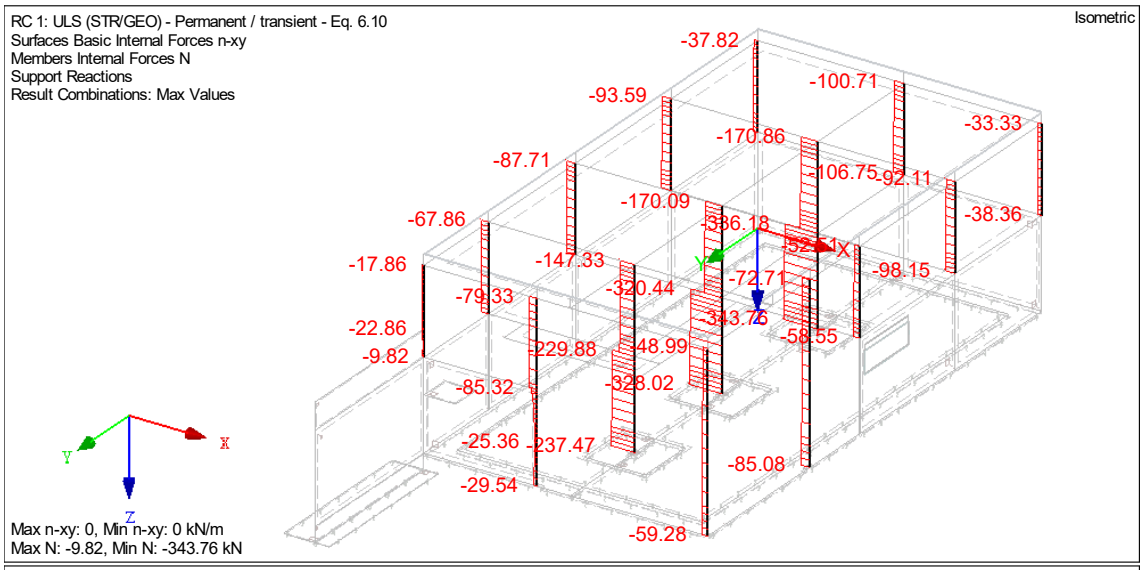

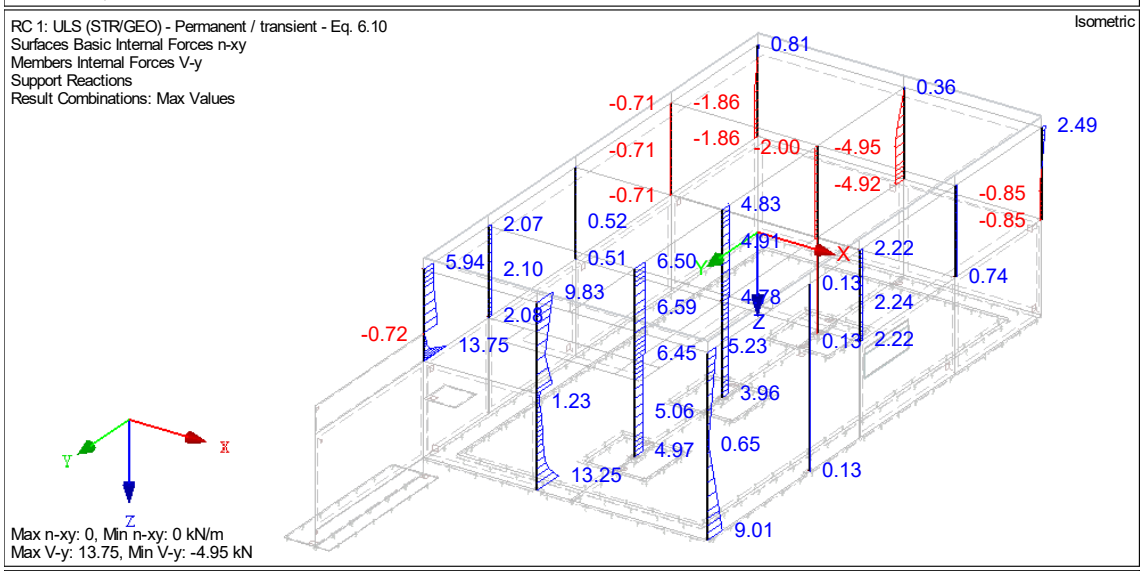

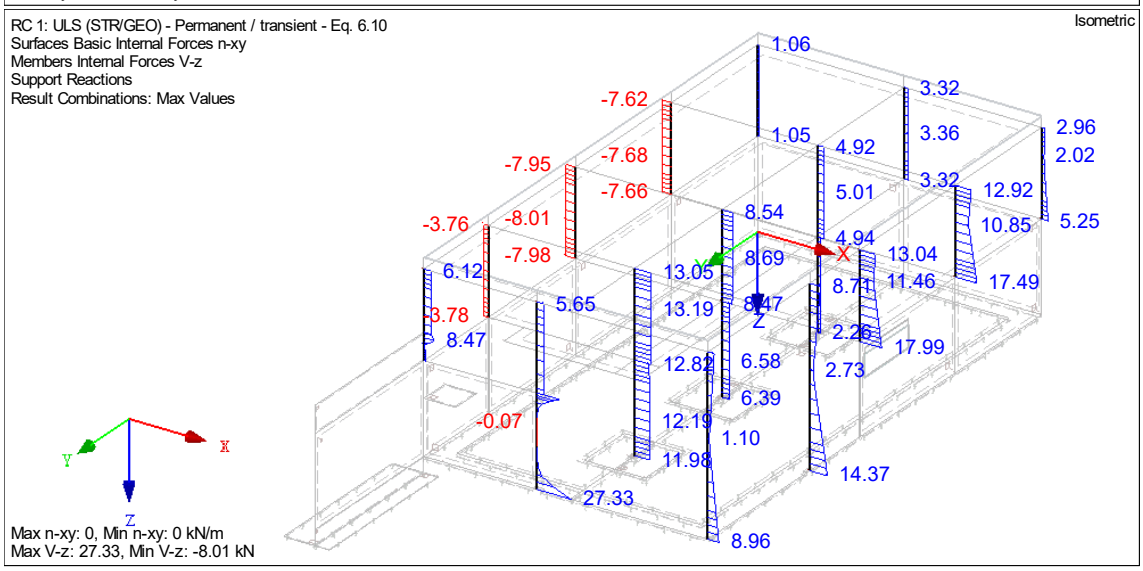

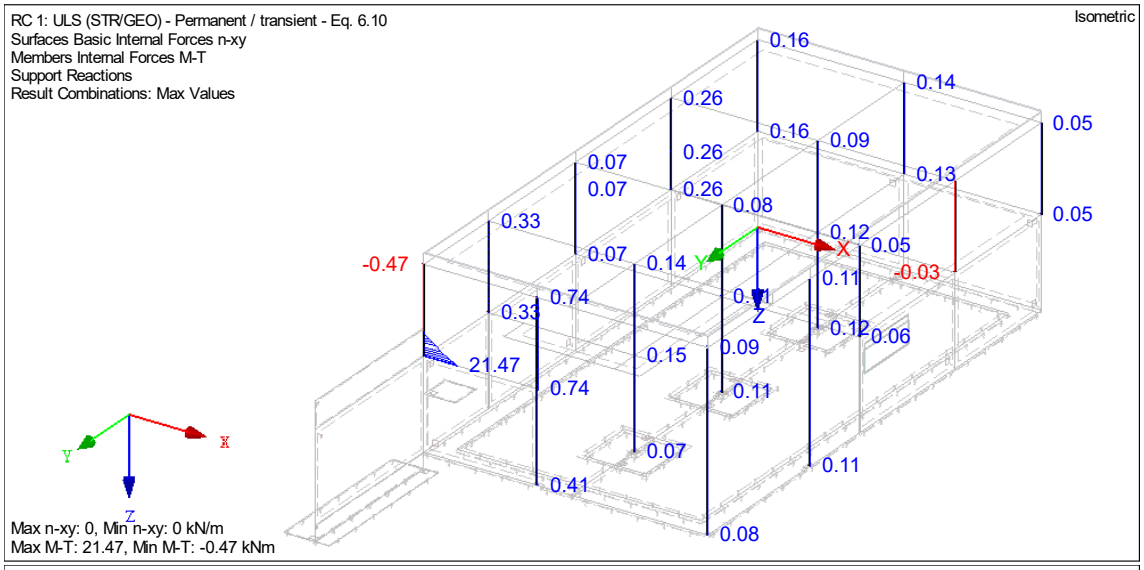
RC 1: ULS (STR/GEO) - Permanent / transient - Eq. 6.10
Surfaces Basic Internal Forces n-xy
Members Internal Forces M-T
Support Reactions
Result Combinations: Max Values
Isometric
Max n-xy: 0, Min n-xy: 0 kN/m
Max M-T: 21.47, Min M-T: -0.47 kNm

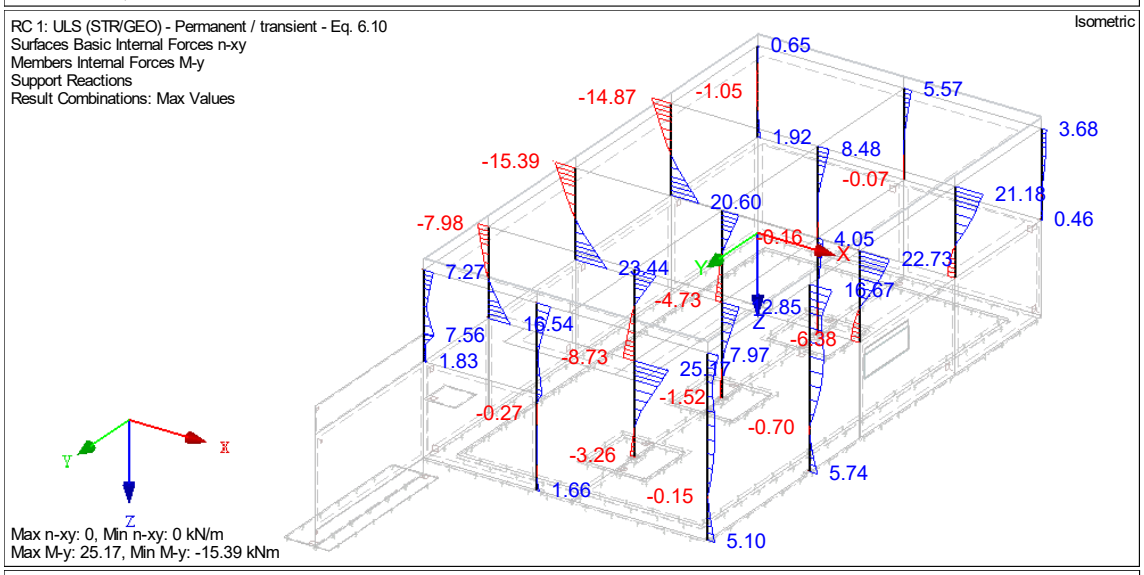
RC 1: ULS (STR/GEO) - Permanent / transient - Eq. 6.10
Surfaces Basic Internal Forces n-xy
Members Internal Forces M-y
Support Reactions
Result Combinations: Max Values
Isometric
Max n-xy: 0, Min n-xy: 0 kN/m
Max M-y: 25.17, Min M-y: -15.39 kNm

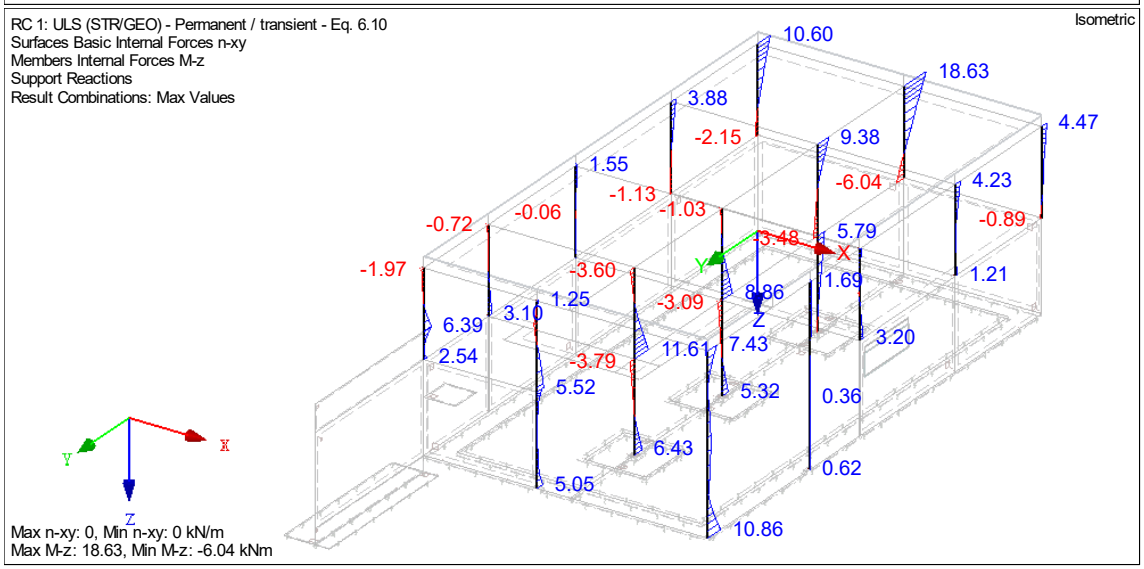
RC 1: ULS (STR/GEO) - Permanent / transient - Eq. 6.10
Surfaces Basic Internal Forces n-xy
Members Internal Forces M-z
Support Reactions
Result Combinations: Max Values
Isometric
Max n-xy: 0, Min n-xy: 0 kN/m
Max M-z: 18.63, Min M-z: -6.04 kNm

3.15. Pillérek vasalása

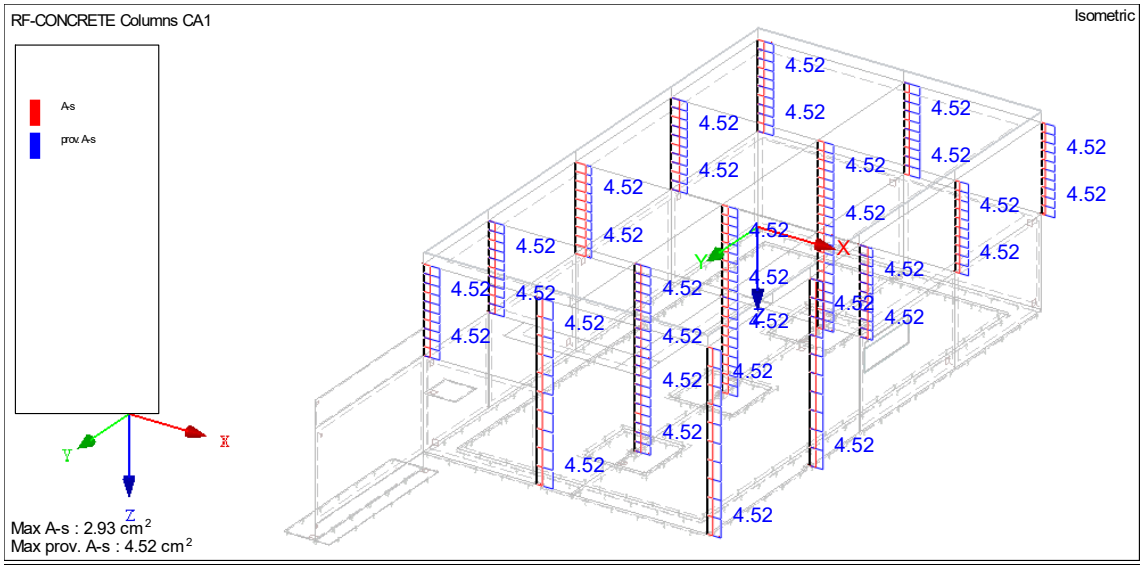

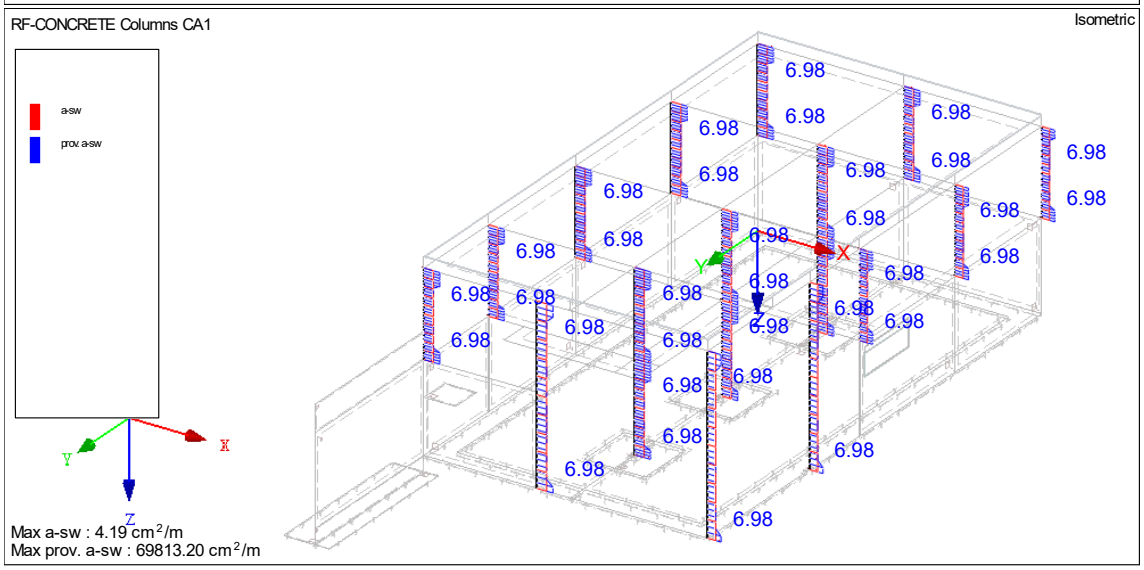

Monolit vasbeton födémben vezetett gépészeti csövek hatása a födém teherbírására

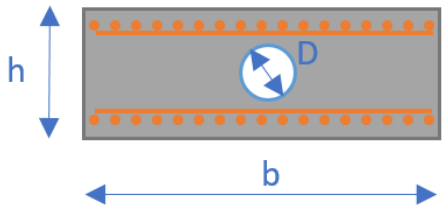

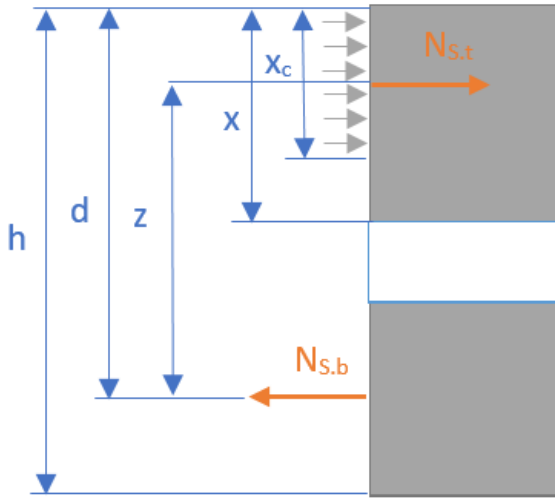

Geometriai méretek

$h := 220\ mm$ - födémvastagság

$b := 1000\ mm$ - vizsgált szélesség

$D := 76\ mm$ - csőátmérő

Ayagjellemzők

Beton C30/37

$f_{cd} := 26.7\ \frac{N}{mm^2}$ - a beton nyomószilárdságának tervezési értéke

Betonacél B500

$f_{yd} := 435\ \frac{N}{mm^2}$ - a betonacél folyáshatárának tervezési értéke

A födém ellenőrzése 1-es irányban

Vasalás

$\phi_{sl.t} := 10\ mm$ - felső betonacél névleges átmérője

$\phi_{sl.b} := 10\ mm$ - alsó betonacél névleges átmérője

$a_{s.t} := 19.16\ \frac{cm^2}{m}$ - 1 méter sávra jutó felső acélbetétek keresztmetszeti területe

$a_{s.b} := 7.85\ \frac{cm^2}{m}$ - 1 méter sávra jutó alsó acélbetétek keresztmetszeti területe

$A_{s.t} := a_{s.t} \cdot b = 19.16\ cm^2$

$A_{s.b} := a_{s.b} \cdot b = 7.85\ cm^2$

$c_{nom} := 20\ mm$ - betontakarás

Hatékony magasság meghatározása

$$d := h - c_{nom} - \frac{\phi_{sl.t}}{2} = 195\ mm$$

Megjegyzés: Ha x_c elég kicsi, akkor az acél megfolyik ($\sigma_s = f_{yd}$). Ennek számszerűsített feltétele az, hogy $\xi_c = \frac{x_c}{d}$ viszonyított érték ne haladja meg a ξ_{c0} határértéket($\xi_c \le \xi_{c0}$).

$\xi_{c0} := 0.49$ - B500 acél esetén

$\sum N = 0$ $\quad N_c = N_{s.b} - N_{s.t}$

$N_c = x_c \cdot b \cdot f_{cd}$

$N_{s.t} := A_{s.t} \cdot (-f_{yd}) = -833.46\ kN$

$N_{s.b} := A_{s.t} \cdot f_{yd} = 833.46\ kN$

$$x_c := \frac{N_{s.b} - N_{s.t}}{f_{cd} \cdot b} = 62.431\ mm$$

$$\xi_c := \frac{x_c}{d} = 0.32$$

$feltételezés := \text{if}\left(\xi_c \le \xi_{c0}, \text{“Helyes”}, \text{“Helytelen”}\right) = \text{“Helyes”}$

Megjegyzés: Ha $x_c \le x$, akkor a vasbeton födém középfelületén vezetett csőnek nincs hatása a födém hajlítási teherbírására.

$$x := \frac{h-D}{2} = 72\ mm$$

$$ellenőrzés := \text{if}\left(x_c \le x, \text{“Megfelel”}, \text{“Nem felel meg”}\right) = \text{“Megfelel”}$$

A lemez ellenőrzése 2-es irányban

Vasalás

$\phi_{sl.t} := 10\ mm$ - felső betonacél névleges átmérője

$\phi_{sl.b} := 10\ mm$ - alsó betonacél névleges átmérője

$a_{s.t} := 19.16\ \frac{cm^2}{m}$ - 1 méter sávra jutó felső acélbetétek keresztmetszeti területe

$a_{s.b} := 7.85\ \frac{cm^2}{m}$ - 1 méter sávra jutó alsó acélbetétek keresztmetszeti területe

$A_{s.t} := a_{s.t} \cdot b = 19.16\ cm^2$

$A_{s.b} := a_{s.b} \cdot b = 7.85\ cm^2$

$c_{nom} := 20\ mm$ - betontakarás

Hatékony magasság meghatározása

$$d := h - c_{nom} - \phi_{sl.t} - \frac{\phi_{sl.t}}{2} = 185\ mm$$

Megjegyzés: Ha x_c elég kicsi, akkor az acél megfolyik ($\sigma_s = f_{yd}$). Ennek számszerűsített feltétele az, hogy $\xi_c = \frac{x_c}{d}$ viszonyított érték ne haladja meg a ξ_{c0} határértéket($\xi_c \le \xi_{c0}$).

$\xi_{c0} := 0.49$ - B500 acél esetén

$\sum N = 0$ $\quad N_c = N_{s.b} - N_{s.t}$

$N_c = x_c \cdot b \cdot f_{cd}$

$N_{s.t} := A_{s.t} \cdot (-f_{yd}) = -833.46\ kN$

$N_{s.b} := A_{s.t} \cdot f_{yd} = 833.46\ kN$

$$x_c := \frac{N_{s.b} - N_{s.t}}{f_{cd} \cdot b} = 62.431\ mm$$

$$\xi_c := \frac{x_c}{d} = 0.337$$

$feltételezés := \text{if}\left(\xi_c \le \xi_{c0}, \text{“Helyes”}, \text{“Helytelen”}\right) = \text{“Helyes”}$

Megjegyzés: Ha $x_c \le x$, akkor a vasbeton födém középfelületén vezetett csőnek nincs hatása a födém hajlítási teherbírására.

$$x := \frac{h-D}{2} = 72\ mm$$

$$ellenőrzés := \text{if}\left(x_c \le x, \text{“Megfelel”}, \text{“Nem felel meg”}\right) = \text{“Megfelel”}$$

SCHARER PLAN Kft.
H-1113 Budapest,
Bartók Béla út 152.
Telefon HU +36 (30) 258 5604

KELER STUDIO
1194 Budapest
Temesvár u. 13
www.kelerstudio.hu

Pomáz, HRSZ 3677/1
HÁSZ Kft.
Asztalosüzem és Irodaépület
Statikai dokumentáció – Acélszerkezetek
2017.10

Tartalom

1. Előtető 3
1.1. Geometria 3
1.2. Anyagok 3
1.3. Szelvények 3
1.4. Terhek és hatások 3
1.5. Teherkombinációk 3
1.6. Igénybevételek 4
1.7. Alakváltozások 4
1.8. Kihasználtság 4
2. Szociális blokk 5
2.1. Geometria 5
2.2. Anyagok 5
2.3. Szelvények 5
2.4. Terhek és hatások 5
2.5. Teherkombinációk 5
2.6. Igénybevételek 6
2.7. Alakváltozások 8
2.8. Kihasználtság 8

1. Előtető

1.1. Geometria

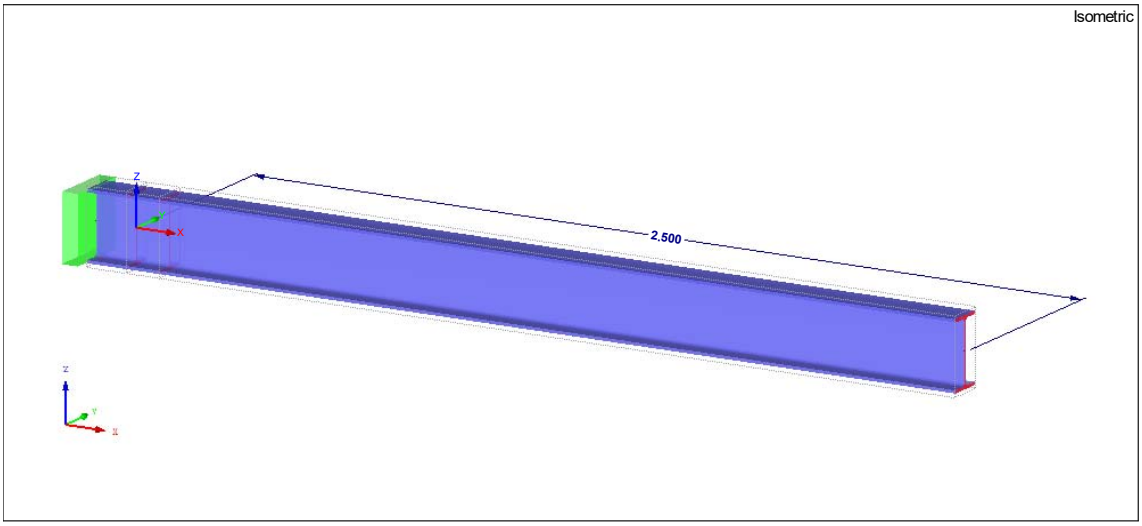

1.2. Anyagok

Material No.	Material Description	Modulus of Elasticity E [kN/cm²]	Shear Modulus G [kN/cm²]	Poisson's Ratio ν [-]	Specific Weight γ [kN/m³]	Coeff. of Th. Exp. α [1/°C]
1	Steel S 235 | EN 10025-2:2004-11	21000,00	8076,92	0,300	78,50	1,20E-05

1.3. Szelvények

Section No.	Cross-Section Description [mm]	Material No.	Moments of inertia [cm⁴] Torsion J	Bending I_y	Bending I_z	Cross-Sectional Areas [cm²] Axial A	Shear A_y	Shear A_z
1	IPE 200	1	6,98	1943,00	142,40	28,48	14,23	10,35

1.4. Terhek és hatások

Load Case	Load Case Description	To Solve	EN 1990 | CEN* | HU QE-Valaszfa... Action Category	Self-Weight - Factor in Direction Active	X	Y	Z
LC1	Önsúlyteher	+	Permanent	+	0,000	0,000	-1,000
LC2	Hóteher	+	Snow (H ≤ 1000 m a.s.l.)	-	0,000	0,000	0,000
LC3	Szélteher	+	Wind	-	0,000	0,000	0,000

1.5. Teherkombinációk

Combin. Express.	Combination Expression Description	Use	EN 1990 | CEN* | HU QE-Valaszfa... Design Situation	Generated Action Combinations
CE1	ULS	+	ULS (STR/GEO) - Permanent / transient - Eq. 6.10	AC1 ... AC5 (5/19)
CE2	SLS	+	SLS - Characteristic	AC6 ... AC10 (5/19)
CE3	SLS	+	SLS - Frequent	AC11 ... AC15 (5/19)
CE4	SLS	+	SLS - Quasi-permanent	AC16 ... AC19 (4/19)

1.6. Igénybevételek

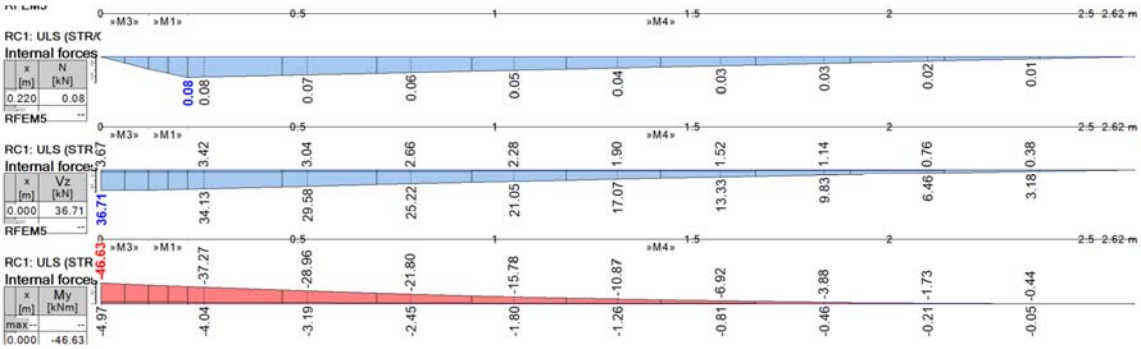

1.7. Alakváltozások

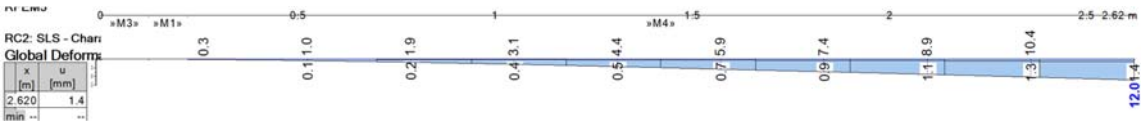

1.8. Kihasználtság

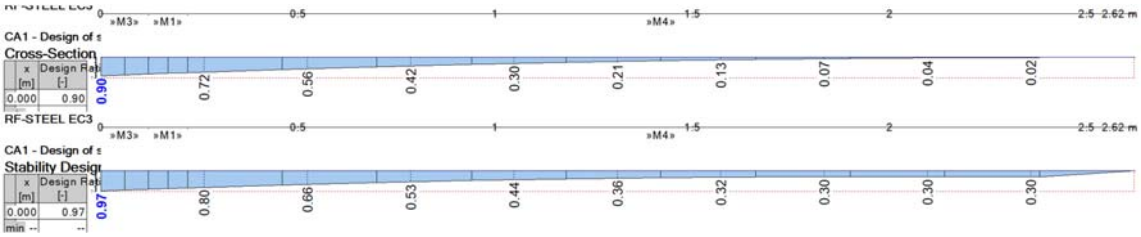

2. Szociális blokk

2.1. Geometria

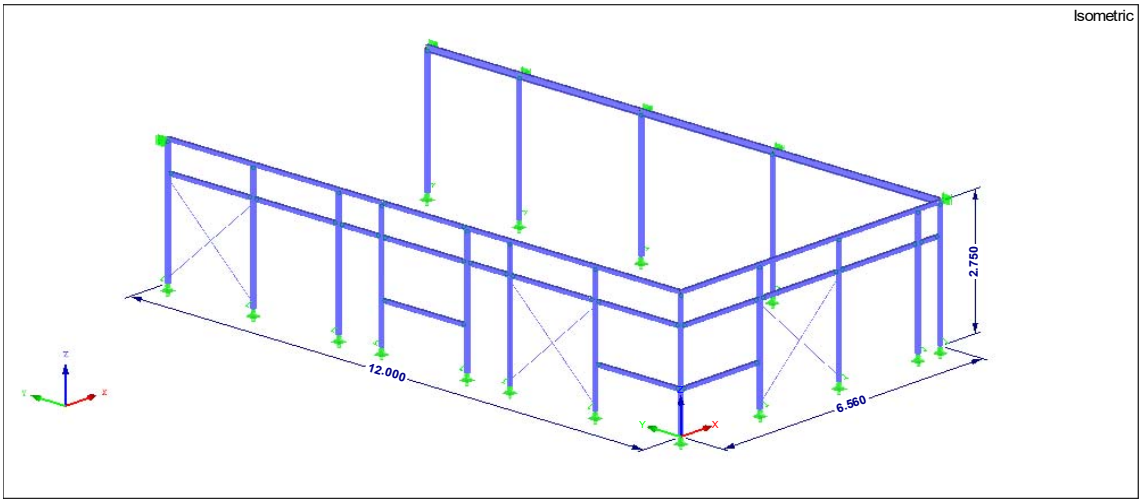

2.2. Anyagok

Material No.	Material Description	Modulus of Elasticity E [kN/cm²]	Shear Modulus G [kN/cm²]	Poisson's Ratio ν [-]	Specific Weight γ [kN/m³]	Coeff. of Th. Exp. α [1/°C]
1	Steel S 235 | EN 10025-2:2004-11	21000,00	8076,92	0,300	78,50	1,20E-05

2.3. Szelvények

Section No.	Cross-Section Description [mm]	Material No.	Moments of inertia [cm⁴] Torsion J	Bending I_y	Bending I_z	Cross-Sectional Areas [cm²] Axial A	Shear A_y	Shear A_z
1	QRO 80x3 (Cold Formed)	1	140,00	87,80	87,80	9,01	3,89	3,89
2	RD 12	1	0,20	0,10	0,10	1,13	0,95	0,95
3	U 140	1	5,68	605,00	62,70	20,40	5,90	8,25

2.4. Terhek és hatások

Load Case	Load Case Description	To Solve	EN 1990 | CEN Action Category	Self-Weight - Factor in Direction Active	X	Y	Z
LC1	Önsúlyteher	+	Permanent	+	0,000	0,000	-1,000
LC2	Állandó teher	+	Permanent/Imposed	-	0,000	0,000	0,000
LC3	Hasznos teher	+	Imposed - Category H: roofs	-	0,000	0,000	0,000

2.5. Teherkombinációk

Combin. Express.	Combination Expression Description	Use	EN 1990 | CEN Design Situation	Generated Action Combinations
CE1	ULS	+	ULS (STR/GEO) - Permanent / transient - Eq. 6.10	AC1 ... AC4 (4/16)
CE2	SLS	+	SLS - Characteristic	AC5 ... AC8 (4/16)
CE3	SLS	+	SLS - Frequent	AC9 ... AC12 (4/16)
CE4	SLS	+	SLS - Quasi-permanent	AC13 ... AC16 (4/16)

2.6. Igénybevételek

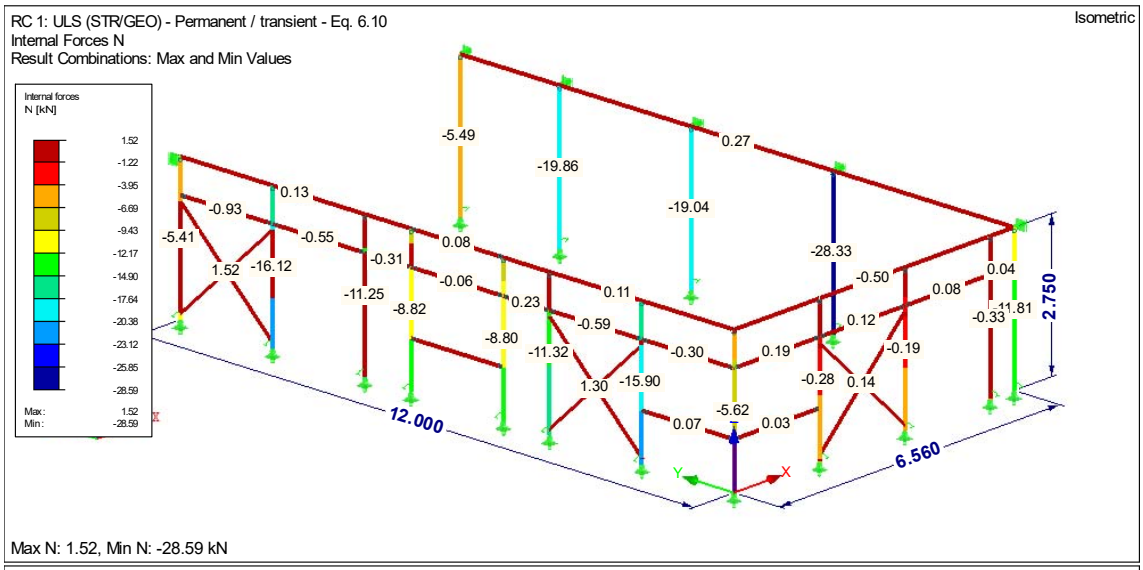

Max N: 1.52, Min N: -28.59 kN

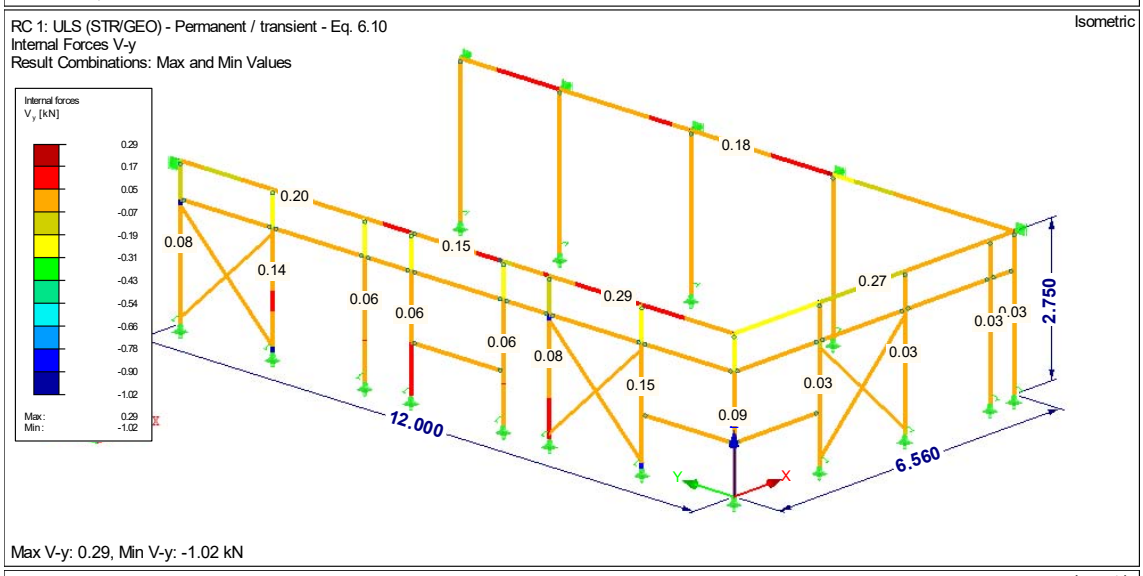

Max V-y: 0.29, Min V-y: -1.02 kN

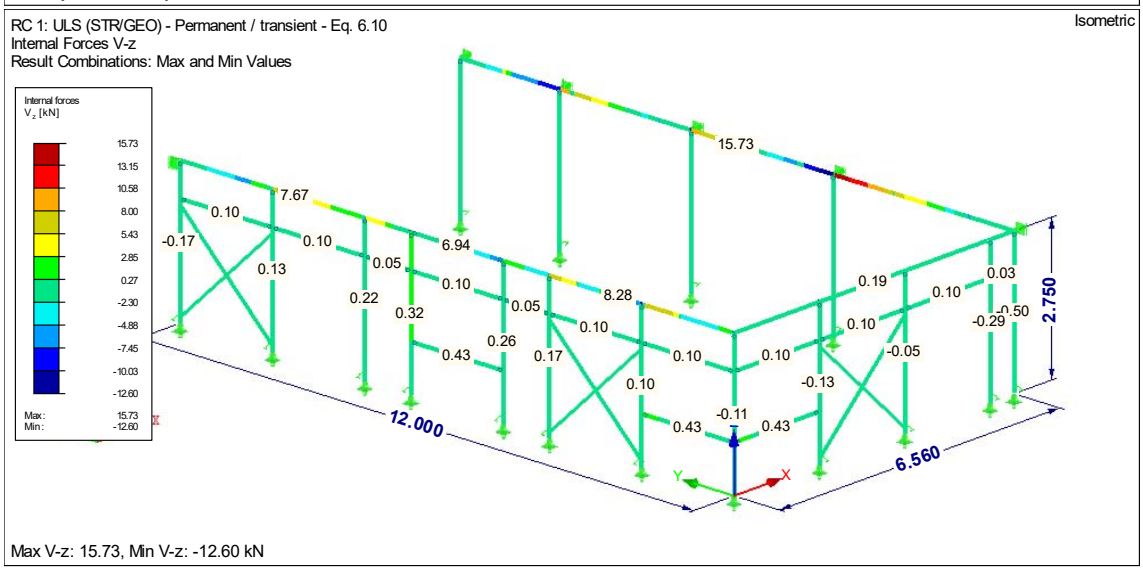

Max V-z: 15.73, Min V-z: -12.60 kN

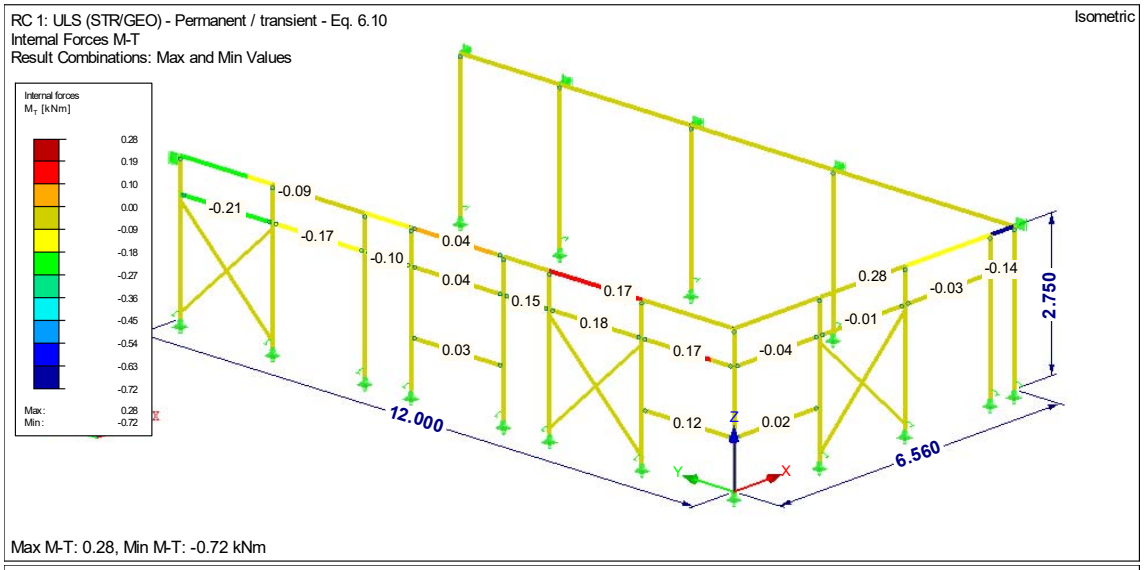

Max M-T: 0.28, Min M-T: -0.72 kNm

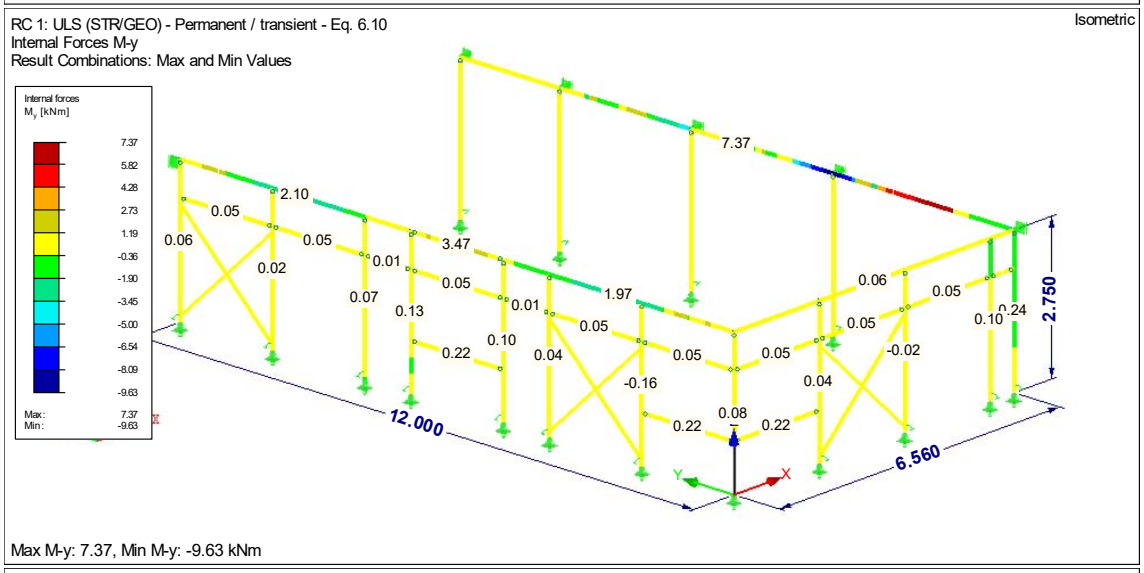

Max M-y: 7.37, Min M-y: -9.63 kNm

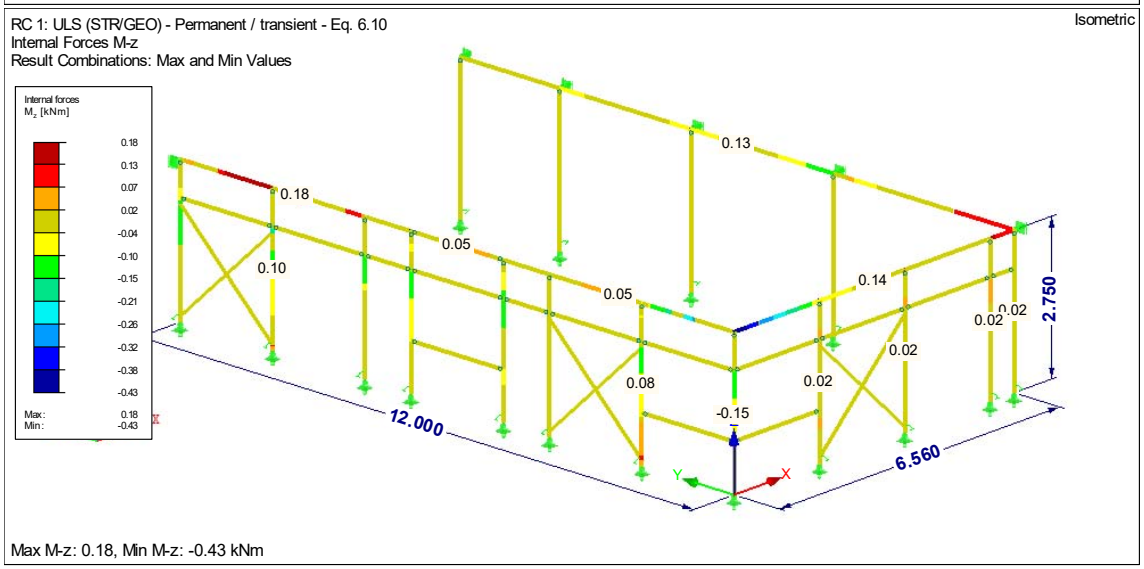

Max M-z: 0.18, Min M-z: -0.43 kNm

2.7. Alakváltozások

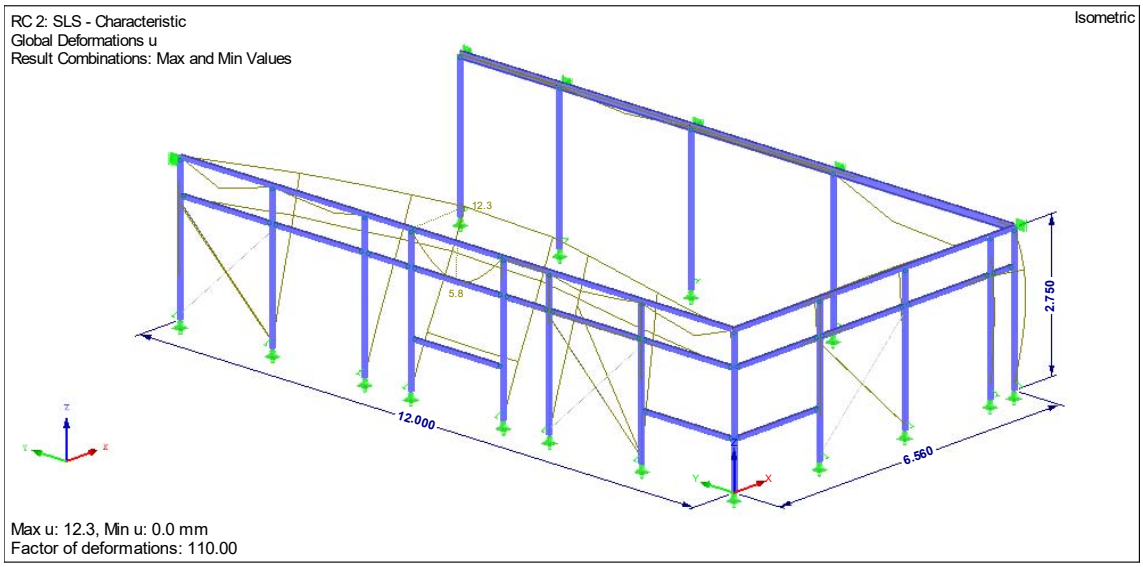

2.8. Kihasználtság

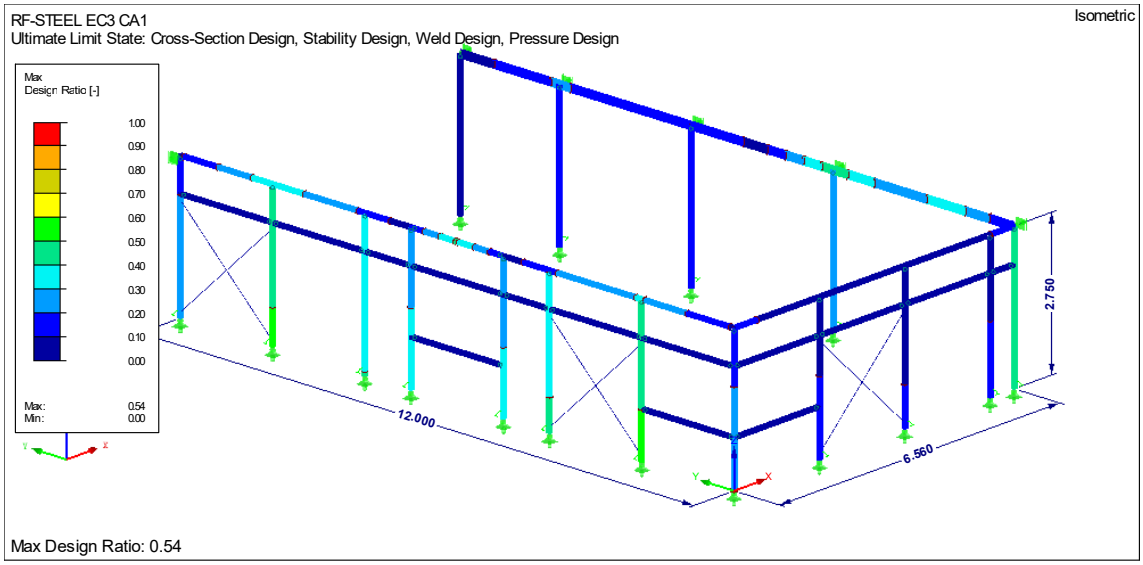

SCHARER PLAN Kft.
H-1113 Budapest,
Bartók Béla út 152.
Telefon HU +36 (30) 258 5604

KELER STUDIO
1194 Budapest
Temesvár u. 13
www.kelerstudio.hu

Pomáz, HRSZ 3677/1
HÁSZ Kft.
Asztalosüzem és Irodaépület
Statikai dokumentáció – Földmegtámasztó szerkezetek
2017.10

Cantilever wall analysis

Input data

Project Pomáz, HÁSZ - Szögtámfal I. szakasz
Date : 2017.09.18.

Material of structure

Unit weight γ = 25.00 kN/m^3
Analysis of concrete structures carried out according to the standard EN 1992 1-1 (EC2).

Concrete : C 30/37
Longitudinal steel : B500

Geometry of structure

No.	Coordinate X [m]	Depth Z [m]
1	0.00	0.00
2	0.00	3.80
3	1.60	3.80
4	1.60	4.20
5	-0.70	4.20
6	-0.70	3.80
7	-0.30	3.80
8	-0.30	0.00

The origin [0,0] is located at the most upper right point of the wall.
Wall section area = 2.06 m^2.

Basic soil parameters

No.	Name	Pattern	φ_{ef} [°]	c_{ef} [kPa]	γ [kN/m^3]	γ_{su} [kN/m^3]	δ [°]
1	Homokos iszap		26.50	12.00	18.00	11.00	18.00
2	Iszap		25.00	90.00	19.00	11.00	17.00
3	Iszapos homok		27.00	0.00	18.00	11.00	18.00

Soil parameters to compute pressure at rest

No.	Name	Pattern	Type calculation	φ [°]	ν [-]	OCR [-]	K_r [-]
1	Homokos iszap		cohesive	-	0.35	-	-
2	Iszap		cohesive	-	0.35	-	-
3	Iszapos homok		cohesionless	27.00	-	-	-

Soil parameters

Homokos iszap
Unit weight : γ = 18,00 kN/m^3
Stress-state : effective

Angle of internal friction : φ_{ef} = 26,50 °
Cohesion of soil : c_{ef} = 12,00 kPa
Angle of friction struc.-soil : δ = 18,00 °
Soil : cohesive
Poisson's ratio : ν = 0,35
Saturated unit weight : γ_{sat} = 21,00 kN/m^3

Iszap
Unit weight : γ = 19,00 kN/m^3
Stress-state : effective
Angle of internal friction : φ_{ef} = 25,00 °
Cohesion of soil : c_{ef} = 90,00 kPa
Angle of friction struc.-soil : δ = 17,00 °
Soil : cohesive
Poisson's ratio : ν = 0,35
Saturated unit weight : γ_{sat} = 21,00 kN/m^3

Iszapos homok
Unit weight : γ = 18,00 kN/m^3
Stress-state : effective
Angle of internal friction : φ_{ef} = 27,00 °
Cohesion of soil : c_{ef} = 0,00 kPa
Angle of friction struc.-soil : δ = 18,00 °
Soil : cohesionless
Saturated unit weight : γ_{sat} = 21,00 kN/m^3

Geological profile and assigned soils

No.	Layer [m]	Assigned soil	Pattern
1	1.00	Homokos iszap	
2	1.30	Iszap	
3	1.00	Iszapos homok	
4	-	Iszapos homok	

Terrain profile
Terrain behind the structure is flat.

Water influence
GWT behind the structure lies at a depth of 3.00 m
Uplift in foot. bottom due to different pressures is not considered.

Inserted surface loads

No.	Surcharge new	Surcharge change	Type	Name	Mag.1 [kN/m^2]	Mag.2 [kN/m^2]	Ord.x x [m]	Length l [m]	Depth z [m]
1	YES		Surface	Hasznos teher	10.00				on terrain
2	YES		Surface	Üzemcsarnok padló	10.00				on terrain

Resistance on front face of the structure

Resistance on front face of the structure: passive
Soil on front face of the structure - Iszapos homok
Soil thickness in front of structure h = 1.20 m
Angle of friction struc.-soil δ = 18.00 °
Terrain in front of structure is flat.

Applied forces acting on the structure

No.	Force new	Force change	Name	Fx [kN/m]	Fz [kN/m]	M [kNm/m]	x [m]	z [m]
1	YES		Támfal vasbeton	0.00	7.50	0.00	-0.15	0.00
2	YES		Üzemcsarnok felszerkezet	0.00	17.00	0.00	-0.15	0.00
3	YES		Tetõ meteorológiai terhei	0.00	1.50	0.00	-0.15	0.00

Analysis settings

Active earth pressure calculation - Coulomb (CSN 730037)
Passive earth pressure calculation - Caqout-Kerisel (CSN 730037)
Standard for concrete structures - EN 1992 1-1 (EC2)
Analysis carried out according to classical theory (safety factor)

Safety factor for slip = 1.10
Safety factor for overturning = 1.10
Factor of safety for bearing capacity = 1.40

The wall is free to move. Active earth pressure is therefore assumed.

Verification No. 1

Forces acting on construction

Name	F_{hor} [kN/m]	App.Pt. Z [m]	F_{vert} [kN/m]	App.Pt. X [m]	Design coefficient
Weight - wall	0.00	-1.36	51.50	0.82	1.000
FF resistance	-55.45	-0.40	-17.97	0.18	1.000
Weight - earth wedge	0.00	-1.39	29.71	1.19	1.000
Active pressure	39.23	-0.91	53.95	1.88	1.350
Water pressure	7.20	-0.40	0.00	0.70	1.350
Hasznos teher	6.90	-0.98	17.71	1.46	1.350
Üzemcsarnok padló	7.02	-0.99	17.71	1.46	1.500
Támfal vasbeton	0.00	-4.20	7.50	0.55	1.000
Üzemcsarnok felszerkezet	0.00	-4.20	17.00	0.55	1.000
Tetõ meteorológiai terhei	0.00	-4.20	1.50	0.55	1.000

Verification of complete wall

Check for overturning stability
Resisting moment M_{res} = 299.58 kNm/m
Overturning moment M_{ovr} = 49.26 kNm/m

Safety factor = 6.08 > 1.40
Wall for overturning is SATISFACTORY

Check for slip
Resisting horizontal force H_{res} = 108.30 kN/m
Active horizontal force H_{act} = 27.08 kN/m

Safety factor = 4.00 > 1.10
Wall for slip is SATISFACTORY

Forces acting at the centre of footing bottom
Overall moment M = -5.88 kNm/m
Normal force N = 212.56 kN/m
Shear force Q = 27.08 kN/m

Overall check - WALL is SATISFACTORY

Verification No. 2

Forces acting on construction

Name	F_{hor} [kN/m]	App.Pt. Z [m]	F_{vert} [kN/m]	App.Pt. X [m]	Design coefficient
Weight - wall	0.00	-1.36	51.50	0.82	1.000
FF resistance	-55.45	-0.40	-17.97	0.18	1.000
Weight - earth wedge	0.00	-1.39	29.71	1.19	1.000
Active pressure	39.23	-0.91	53.95	1.88	1.350
Water pressure	7.20	-0.40	0.00	0.70	1.350
Hasznos teher	6.90	-0.98	17.71	1.46	1.350
Üzemcsarnok padló	7.02	-0.99	17.71	1.46	0.000
Támfal vasbeton	0.00	-4.20	7.50	0.55	1.000
Üzemcsarnok felszerkezet	0.00	-4.20	17.00	0.55	1.000
Tetõ meteorológiai terhei	0.00	-4.20	1.50	0.55	1.000

Verification of complete wall

Check for overturning stability
Resisting moment M_{res} = 260.79 kNm/m
Overturning moment M_{ovr} = 38.86 kNm/m

Safety factor = 6.71 > 1.40
Wall for overturning is SATISFACTORY

Check for slip
Resisting horizontal force H_{res} = 94.76 kN/m
Active horizontal force H_{act} = 16.56 kN/m

Safety factor = 5.72 > 1.10
Wall for slip is SATISFACTORY

Forces acting at the centre of footing bottom
Overall moment M = -8.04 kNm/m
Normal force N = 185.99 kN/m
Shear force Q = 16.56 kN/m

Overall check - WALL is SATISFACTORY

Bearing capacity of foundation soil

Forces acting at the centre of the footing bottom

Numbe	Moment [kNm/m]	Norm. force [kN/m]	Shear Force [kN/m]	Eccentricity [m]	Stress [kPa]
1	-5.88	212.56	27.08	0.00	92.42
2	-8.04	185.99	16.56	0.00	80.86

Bearing capacity of foundation soil check

Eccentricity verification
Max. eccentricity of normal force e = 0.0 mm
Maximum allowable eccentricity e_{alw} = 759.0 mm

Eccentricity of the normal force is SATISFACTORY

Footing bottom bearing capacity verification
Max. stress at footing bottom σ = 92.42 kPa
Bearing capacity of foundation soil R_d = 330.00 kPa

Safety factor = 3.57 > 1.40
Bearing capacity of foundation soil is SATISFACTORY

Overall verification - bearing capacity of found. soil is SATISFACTORY

Dimensioning No. 1

Forces acting on construction

Name	F_{hor} [kN/m]	App.Pt. Z [m]	F_{vert} [kN/m]	App.Pt. X [m]	Design coefficient
Weight - wall	0.00	-1.90	28.49	0.15	1.350
FF resistance	-24.60	-0.27	-7.99	0.00	1.000
Pressure at rest	70.85	-1.27	0.00	0.30	1.350
Water pressure	3.19	-0.27	0.00	0.30	1.350
Hasznos teher	20.57	-1.89	0.00	0.30	1.350
Üzemcsarnok padló	20.57	-1.89	0.00	0.30	1.500
Támfal vasbeton	0.00	-3.80	7.50	0.15	1.350
Üzemcsarnok felszerkezet	0.00	-3.80	17.00	0.15	1.350
Tetõ meteorológiai terhei	0.00	-3.80	1.50	0.15	1.350

Wall stem check

Reinforcement and dimensions of the cross-section
Bar diameter = 20.0 mm
Number of bars = 9
Reinforcement cover = 35.0 mm
Cross-section width = 1.00 m
Cross-section depth = 0.30 m

Reinforcement ratio ρ = 1.11 % > 0.15 % = ρ_{min}
Ultimate moment M_{Rd} = 275.70 kNm > 226.32 kNm = M_{Ed}

Cross-section is SATISFACTORY.

Dimensioning No. 2

Forces acting on construction

Name	F_{hor} [kN/m]	App.Pt. Z [m]	F_{vert} [kN/m]	App.Pt. X [m]	Design coefficient
Weight - wall	0.00	-1.36	51.50	0.82	1.350
FF resistance	-55.45	-0.40	-17.97	0.18	1.000
Weight - earth wedge	0.00	-1.39	29.71	1.19	1.350
Active pressure	39.23	-0.91	53.95	1.88	1.350
Water pressure	7.20	-0.40	0.00	0.70	1.350
Hasznos teher	6.90	-0.98	17.71	1.46	1.350
Üzemcsarnok padló	7.02	-0.99	17.71	1.46	1.500
Támfal vasbeton	0.00	-4.20	7.50	0.55	1.350
Üzemcsarnok felszerkezet	0.00	-4.20	17.00	0.55	1.350
Tetõ meteorológiai terhei	0.00	-4.20	1.50	0.55	1.350

Front wall jump check

Foundation thickness is greater than offset of the front wall jump. Reinforcement is not required.

Dimensioning No. 3

Forces acting on construction

Name	F_{hor} [kN/m]	App.Pt. Z [m]	F_{vert} [kN/m]	App.Pt. X [m]	Design coefficient
Weight - wall	0.00	-0.20	16.00	1.50	1.350
Weight - earth wedge	0.00	-1.39	29.71	1.19	1.350
Active pressure	39.23	-0.91	53.95	1.88	1.350
Hasznos teher	6.90	-0.98	17.71	1.46	1.500
Üzemcsarnok padló	7.02	-0.99	17.71	1.46	1.350
Contact tractions	0.00	0.00	-155.60	1.54	0.000

Back wall jump check

Reinforcement and dimensions of the cross-section

Bar diameter = 12.0 mm
Number of bars = 9
Reinforcement cover = 35.0 mm
Cross-section width = 1.00 m
Cross-section depth = 0.40 m

Reinforcement ratio ρ = 0.28 % > 0.15 % = ρ_{min}
Ultimate moment M_{Rd} = 153.98 kNm > 108.66 kNm = M_{Ed}

Cross-section is SATISFACTORY.

Dimensioning No. 4

Forces acting on construction

Name	F_{hor} [kN/m]	App.Pt. Z [m]	F_{vert} [kN/m]	App.Pt. X [m]	Design coefficient
Weight - wall	0.00	-1.30	19.50	0.15	1.350
Pressure at rest	33.53	-0.86	0.00	0.30	1.350
Water pressure	0.00	-2.60	0.00	0.30	1.350
Hasznos teher	14.02	-1.30	0.00	0.30	1.350
Üzemcsarnok padló	14.02	-1.30	0.00	0.30	1.350
Támfal vasbeton	0.00	-2.60	7.50	0.15	1.500

Name	F_{hor} [kN/m]	App.Pt. Z [m]	F_{vert} [kN/m]	App.Pt. X [m]	Design coefficient
Üzemcsarnok felszerkezet	0.00	-2.60	17.00	0.15	1.350
Tető meteorológiai terhei	0.00	-2.60	1.50	0.15	1.350

Wall check at the construction joint 2.60 m from the wall crest
Reinforcement and dimensions of the cross-section
Bar diameter = 16.0 mm
Number of bars = 9
Reinforcement cover = 35.0 mm
Cross-section width = 1.00 m
Cross-section depth = 0.30 m

Reinforcement ratio ρ = 0.70 % > 0.15 % = ρ_{min}
Ultimate moment M_{Rd} = 186.72 kNm > 87.99 kNm = M_{Ed}

Cross-section is SATISFACTORY.

Slope stabilty analysis

Project
Analysis type : in effective parameters

Analysis settings
Analysis settings : Standard
Analysis type : Safety factor
Safety factor : 1,50

Results (Stage of construction 1)

Analysis 1
Circular slip surface

Slip surface parameters							
Center :	x =	-1,52	[m]	Angles :	α_1 =	-48,85	[°]
	z =	0,96	[m]		α_2 =	80,82	[°]
Radius :	R =	6,02	[m]				
The slip surface after optimization.							

Slope stability verification (Bishop)
Sum of active forces : F_a = 202,97 kN/m
Sum of passive forces : F_p = 417,92 kN/m

Sliding moment : M_a = 1221,87 kNm/m
Resisting moment : M_p = 2515,85 kNm/m

Factor of safety = 2,06 > 1,50
Slope stability ACCEPTABLE

Cantilever wall analysis

Input data

Project Pomáz, HÁSZ - Szögtámfal II. szakasz
Date : 2017.09.18.

Material of structure

Unit weight γ = 25.00 kN/m^3
Analysis of concrete structures carried out according to the standard EN 1992 1-1 (EC2).

Concrete : C 30/37
Longitudinal steel : B500

Geometry of structure

No.	Coordinate X [m]	Depth Z [m]
1	0.00	0.00
2	0.00	3.80
3	1.60	3.80
4	1.60	4.20
5	-0.70	4.20
6	-0.70	3.80
7	-0.30	3.80
8	-0.30	0.00

The origin [0,0] is located at the most upper right point of the wall.
Wall section area = 2.06 m^2.

Basic soil parameters

No.	Name	Pattern	φ_{ef} [°]	c_{ef} [kPa]	γ [kN/m^3]	γ_{su} [kN/m^3]	δ [°]
1	Homokos iszap		26.50	12.00	18.00	11.00	18.00
2	Iszap		25.00	90.00	19.00	11.00	17.00
3	Iszapos homok		27.00	0.00	18.00	11.00	18.00

Soil parameters to compute pressure at rest

No.	Name	Pattern	Type calculation	φ [°]	ν [-]	OCR [-]	K_r [-]
1	Homokos iszap		cohesive	-	0.35	-	-
2	Iszap		cohesive	-	0.35	-	-
3	Iszapos homok		cohesionless	27.00	-	-	-

Soil parameters

Homokos iszap

Unit weight : γ = 18,00 kN/m^3
Stress-state : effective

Angle of internal friction : φ_{ef} = 26,50 °
Cohesion of soil : c_{ef} = 12,00 kPa
Angle of friction struc.-soil : δ = 18,00 °
Soil : cohesive
Poisson's ratio : ν = 0,35
Saturated unit weight : γ_{sat} = 21,00 kN/m^3

Iszap
Unit weight : γ = 19,00 kN/m^3
Stress-state : effective
Angle of internal friction : φ_{ef} = 25,00 °
Cohesion of soil : c_{ef} = 90,00 kPa
Angle of friction struc.-soil : δ = 17,00 °
Soil : cohesive
Poisson's ratio : ν = 0,35
Saturated unit weight : γ_{sat} = 21,00 kN/m^3

Iszapos homok
Unit weight : γ = 18,00 kN/m^3
Stress-state : effective
Angle of internal friction : φ_{ef} = 27,00 °
Cohesion of soil : c_{ef} = 0,00 kPa
Angle of friction struc.-soil : δ = 18,00 °
Soil : cohesionless
Saturated unit weight : γ_{sat} = 21,00 kN/m^3

Geological profile and assigned soils

No.	Layer [m]	Assigned soil	Pattern
1	1.00	Homokos iszap	
2	1.30	Iszap	
3	1.00	Iszapos homok	
4	-	Iszapos homok	

Terrain profile
Terrain behind the structure is flat.

Water influence
GWT behind the structure lies at a depth of 3.00 m
Uplift in foot. bottom due to different pressures is considered as linear.

Inserted surface loads

No.	Surcharge new	Surcharge change	Type	Name	Mag.1 [kN/m^2]	Mag.2 [kN/m^2]	Ord.x x [m]	Length l [m]	Depth z [m]
1	YES		Surface	Hasznos teher	10.00				on terrain

Resistance on front face of the structure
Resistance on front face of the structure: passive
Soil on front face of the structure - Iszapos homok

Soil thickness in front of structure h = 1.20 m
Angle of friction struc.-soil δ = 18.00 °
Terrain in front of structure is flat.

Applied forces acting on the structure

No.	Force new	Force change	Name	Fx [kN/m]	Fz [kN/m]	M [kNm/m]	x [m]	z [m]
1	YES		Támfal vasbeton	0.00	10.00	0.00	-0.20	0.00

Analysis settings

Active earth pressure calculation - Coulomb (CSN 730037)
Passive earth pressure calculation - Caqout-Kerisel (CSN 730037)
Standard for concrete structures - EN 1992 1-1 (EC2)
Analysis carried out according to classical theory (safety factor)

Safety factor for slip = 1.10
Safety factor for overturning = 1.10
Factor of safety for bearing capacity = 1.40

The wall is free to move. Active earth pressure is therefore assumed.

Verification No. 1

Forces acting on construction

Name	F_{hor} [kN/m]	App.Pt. Z [m]	F_{vert} [kN/m]	App.Pt. X [m]	Design coefficient
Weight - wall	0.00	-1.36	51.50	0.82	1.000
FF resistance	-55.45	-0.40	-17.97	0.18	1.000
Weight - earth wedge	0.00	-1.39	29.71	1.19	1.000
Active pressure	39.23	-0.91	53.95	1.88	1.350
Water pressure	7.20	-0.40	0.00	0.70	1.350
Uplift pressure	0.00	0.00	-6.00	1.53	1.350
Hasznos teher	6.90	-0.98	17.71	1.46	1.500
Támfal vasbeton	0.00	-4.20	10.00	0.50	1.000

Verification of complete wall

Check for overturning stability
Resisting moment M_{res} = 242.95 kNm/m
Overturning moment M_{ovr} = 39.87 kNm/m

Safety factor = 6.09 > 1.40
Wall for overturning is SATISFACTORY

Check for slip
Resisting horizontal force H_{res} = 83.84 kN/m
Active horizontal force H_{act} = 17.59 kN/m

Safety factor = 4.77 > 1.10
Wall for slip is SATISFACTORY

Forces acting at the centre of footing bottom
Overall moment M = -13.85 kNm/m
Normal force N = 164.54 kN/m
Shear force Q = 17.59 kN/m

Overall check - WALL is SATISFACTORY

Verification No. 2

Forces acting on construction

Name	F_{hor} [kN/m]	App.Pt. Z [m]	F_{vert} [kN/m]	App.Pt. X [m]	Design coefficient
Weight - wall	0.00	-1.36	51.50	0.82	1.000
FF resistance	-55.45	-0.40	-17.97	0.18	1.000
Weight - earth wedge	0.00	-1.39	29.71	1.19	1.000
Active pressure	39.23	-0.91	53.95	1.88	1.350
Water pressure	7.20	-0.40	0.00	0.70	1.350
Uplift pressure	0.00	0.00	-6.00	1.53	1.350
Hasznos teher	6.90	-0.98	17.71	1.46	0.000
Támfal vasbeton	0.00	-4.20	10.00	0.50	1.000

Verification of complete wall

Check for overturning stability
Resisting moment M_{res} = 204.16 kNm/m
Overturning moment M_{ovr} = 29.77 kNm/m

Safety factor = 6.86 > 1.40
Wall for overturning is SATISFACTORY

Check for slip
Resisting horizontal force H_{res} = 70.30 kN/m
Active horizontal force H_{act} = 7.24 kN/m

Safety factor = 9.71 > 1.10
Wall for slip is SATISFACTORY

Forces acting at the centre of footing bottom
Overall moment M = -15.71 kNm/m
Normal force N = 137.97 kN/m
Shear force Q = 7.24 kN/m

Overall check - WALL is SATISFACTORY

Bearing capacity of foundation soil

Forces acting at the centre of the footing bottom

Numbe	Moment [kNm/m]	Norm. force [kN/m]	Shear Force [kN/m]	Eccentricity [m]	Stress [kPa]
1	-13.85	164.54	17.59	0.00	71.54
2	-15.71	137.97	7.24	0.00	59.99

Bearing capacity of foundation soil check

Eccentricity verification
Max. eccentricity of normal force e = 0.0 mm
Maximum allowable eccentricity e_{alw} = 759.0 mm

Eccentricity of the normal force is SATISFACTORY

Footing bottom bearing capacity verification
Max. stress at footing bottom σ = 71.54 kPa
Bearing capacity of foundation soil R_d = 330.00 kPa

Safety factor = 4.61 > 1.40
Bearing capacity of foundation soil is SATISFACTORY

Overall verification - bearing capacity of found. soil is SATISFACTORY

Dimensioning No. 1

Forces acting on construction

Name	F_{hor} [kN/m]	App.Pt. Z [m]	F_{vert} [kN/m]	App.Pt. X [m]	Design coefficient
Weight - wall	0.00	-1.90	28.49	0.15	1.350
FF resistance	-24.60	-0.27	-7.99	0.00	1.000
Pressure at rest	70.85	-1.27	0.00	0.30	1.350
Water pressure	3.19	-0.27	0.00	0.30	1.350
Uplift pressure	0.00	0.00	-3.99	0.20	1.350
Hasznos teher	20.57	-1.89	0.00	0.30	1.500
Támfal vasbeton	0.00	-3.80	10.00	0.10	1.350

Wall stem check

Reinforcement and dimensions of the cross-section
Bar diameter = 20.0 mm
Number of bars = 9
Reinforcement cover = 35.0 mm
Cross-section width = 1.00 m
Cross-section depth = 0.30 m

Reinforcement ratio ρ = 1.11 % > 0.15 % = ρ_{min}
Ultimate moment M_{Rd} = 275.70 kNm > 174.70 kNm = M_{Ed}

Cross-section is SATISFACTORY.

Dimensioning No. 2

Forces acting on construction

Name	F_{hor} [kN/m]	App.Pt. Z [m]	F_{vert} [kN/m]	App.Pt. X [m]	Design coefficient
Weight - wall	0.00	-1.36	51.50	0.82	1.350
FF resistance	-55.45	-0.40	-17.97	0.18	1.000
Weight - earth wedge	0.00	-1.39	29.71	1.19	1.350
Active pressure	39.23	-0.91	53.95	1.88	1.350
Water pressure	7.20	-0.40	0.00	0.70	1.350
Uplift pressure	0.00	0.00	-6.00	1.53	1.350
Hasznos teher	6.90	-0.98	17.71	1.46	1.500
Támfal vasbeton	0.00	-4.20	10.00	0.50	1.350

Front wall jump check

Foundation thickness is greater than offset of the front wall jump. Reinforcement is not required.

Dimensioning No. 3

Forces acting on construction

Name	F_{hor} [kN/m]	App.Pt. Z [m]	F_{vert} [kN/m]	App.Pt. X [m]	Design coefficient
Weight - wall	0.00	-0.20	16.00	1.50	1.350
Weight - earth wedge	0.00	-1.39	29.71	1.19	1.350
Active pressure	39.23	-0.91	53.95	1.88	1.350
Hasznos teher	6.90	-0.98	17.71	1.46	1.500
Contact tractions	0.00	0.00	-146.31	1.56	0.000

Back wall jump check

Reinforcement and dimensions of the cross-section
Bar diameter = 12.0 mm
Number of bars = 9
Reinforcement cover = 35.0 mm
Cross-section width = 1.00 m
Cross-section depth = 0.40 m

Reinforcement ratio ρ = 0.28 % > 0.15 % = ρ_{min}
Ultimate moment M_{Rd} = 153.98 kNm > 97.95 kNm = M_{Ed}

Cross-section is SATISFACTORY.

Dimensioning No. 4

Forces acting on construction

Name	F_{hor} [kN/m]	App.Pt. Z [m]	F_{vert} [kN/m]	App.Pt. X [m]	Design coefficient
Weight - wall	0.00	-1.00	15.00	0.15	1.350
Pressure at rest	19.65	-0.66	0.00	0.30	1.350
Water pressure	0.00	-2.00	0.00	0.30	1.350
Hasznos teher	10.77	-1.00	0.00	0.30	1.500
Támfal vasbeton	0.00	-2.00	10.00	0.10	0.000

Wall check at the construction joint 2.00 m from the wall crest

Reinforcement and dimensions of the cross-section
Bar diameter = 12.0 mm
Number of bars = 9
Reinforcement cover = 35.0 mm
Cross-section width = 1.00 m
Cross-section depth = 0.30 m

Reinforcement ratio ρ = 0.39 % > 0.15 % = ρ_{min}
Ultimate moment M_{Rd} = 109.73 kNm > 33.72 kNm = M_{Ed}

Cross-section is SATISFACTORY.

Slope stabilty analysis

Project

Analysis type : in effective parameters

Analysis settings

Analysis settings : Standard
Analysis type : Safety factor
Safety factor : 1,50

Results (Stage of construction 1)

Analysis 1

Circular slip surface

Slip surface parameters							
Center :	x =	-0,76	[m]	Angles :	α_1 =	-48,16	[°]
	z =	0,50	[m]		α_2 =	84,53	[°]
Radius :	R =	5,25	[m]				
The slip surface after optimization.							

Slope stability verification (Bishop)

Sum of active forces : F_a = 160,42 kN/m
Sum of passive forces : F_p = 349,62 kN/m

Sliding moment : M_a = 842,23 kNm/m
Resisting moment : M_p = 1835,53 kNm/m

Factor of safety = 2,18 > 1,50
Slope stability ACCEPTABLE

Cantilever wall analysis

Input data

Project Pomáz, HÁSZ - Szögtámfal III. szakasz
Date : 2017.09.18.

Material of structure

Unit weight γ = 25.00 kN/m^3
Analysis of concrete structures carried out according to the standard EN 1992 1-1 (EC2).

Concrete : C 30/37
Longitudinal steel : B500

Geometry of structure

No.	Coordinate X [m]	Depth Z [m]
1	0.00	0.00
2	0.00	2.00
3	0.40	2.00
4	0.40	2.40
5	-0.70	2.40
6	-0.70	2.00
7	-0.30	2.00
8	-0.30	0.00

The origin [0,0] is located at the most upper right point of the wall.
Wall section area = 1.04 m^2.

Basic soil parameters

No.	Name	Pattern	φ_{ef} [°]	c_{ef} [kPa]	γ [kN/m^3]	γ_{su} [kN/m^3]	δ [°]
1	Homokos iszap		26.50	12.00	18.00	11.00	18.00
2	Iszap		25.00	90.00	19.00	11.00	17.00
3	Iszapos homok		27.00	0.00	18.00	11.00	18.00

Soil parameters to compute pressure at rest

No.	Name	Pattern	Type calculation	φ [°]	ν [-]	OCR [-]	K_r [-]
1	Homokos iszap		cohesive	-	0.35	-	-
2	Iszap		cohesive	-	0.35	-	-
3	Iszapos homok		cohesionless	27.00	-	-	-

Soil parameters

Homokos iszap
Unit weight : γ = 18,00 kN/m^3
Stress-state : effective

Angle of internal friction :	φ_{ef} =	26,50 °
Cohesion of soil :	c_{ef} =	12,00 kPa
Angle of friction struc.-soil :	δ =	18,00 °
Soil :	cohesive	
Poisson's ratio :	ν =	0,35
Saturated unit weight :	γ_{sat} =	21,00 kN/m^3

Iszap

Unit weight :	γ =	19,00 kN/m^3
Stress-state :	effective	
Angle of internal friction :	φ_{ef} =	25,00 °
Cohesion of soil :	c_{ef} =	90,00 kPa
Angle of friction struc.-soil :	δ =	17,00 °
Soil :	cohesive	
Poisson's ratio :	ν =	0,35
Saturated unit weight :	γ_{sat} =	21,00 kN/m^3

Iszapos homok

Unit weight :	γ =	18,00 kN/m^3
Stress-state :	effective	
Angle of internal friction :	φ_{ef} =	27,00 °
Cohesion of soil :	c_{ef} =	0,00 kPa
Angle of friction struc.-soil :	δ =	18,00 °
Soil :	cohesionless	
Saturated unit weight :	γ_{sat} =	21,00 kN/m^3

Geological profile and assigned soils

No.	Layer [m]	Assigned soil	Pattern
1	1.00	Homokos iszap	
2	1.30	Iszap	
3	1.00	Iszapos homok	
4	-	Iszapos homok	

Terrain profile

Terrain behind the structure is flat.

Water influence

GWT behind the structure lies at a depth of 1.20 m
Uplift in foot. bottom due to different pressures is considered as linear.

Inserted surface loads

No.	Surcharge new	Surcharge change	Type	Name	Mag.1 [kN/m^2]	Mag.2 [kN/m^2]	Ord.x x [m]	Length l [m]	Depth z [m]
1	YES		Surface	Hasznos teher	10.00				on terrain

Resistance on front face of the structure

Resistance on front face of the structure: passive
Soil on front face of the structure - Iszapos homok

Soil thickness in front of structure h = 1.20 m
Angle of friction struc.-soil δ = 18.00 °
Terrain in front of structure is flat.

Analysis settings

Active earth pressure calculation - Coulomb (CSN 730037)
Passive earth pressure calculation - Caqout-Kerisel (CSN 730037)
Standard for concrete structures - EN 1992 1-1 (EC2)
Analysis carried out according to classical theory (safety factor)

Safety factor for slip = 1.10
Safety factor for overturning = 1.10
Factor of safety for bearing capacity = 1.40

The wall is free to move. Active earth pressure is therefore assumed.

Verification No. 1

Forces acting on construction

Name	F_{hor} [kN/m]	App.Pt. Z [m]	F_{vert} [kN/m]	App.Pt. X [m]	Design coefficient
Weight - wall	0.00	-0.89	26.00	0.55	1.000
FF resistance	-55.45	-0.40	-17.97	0.18	1.000
Weight - earth wedge	0.00	-0.61	1.38	0.83	1.000
Active pressure	1.09	-0.05	0.36	1.10	1.350
Water pressure	7.20	-0.40	0.00	0.70	1.350
Uplift pressure	0.00	0.00	-6.00	0.73	1.350
Hasznos teher	0.32	-0.05	5.86	0.87	1.500

Verification of complete wall

Check for overturning stability
Resisting moment M_{res} = 14.45 kNm/m
Overturning moment M_{ovr} = -18.19 kNm/m

Safety factor = 1000.00 > 1.40
Wall for overturning is SATISFACTORY

Check for slip
Resisting horizontal force H_{res} = 5.39 kN/m
Active horizontal force H_{act} = -43.78 kN/m

Safety factor = 1000.00 > 1.10
Wall for slip is SATISFACTORY

Forces acting at the centre of footing bottom
Overall moment M = -26.82 kNm/m
Normal force N = 10.59 kN/m
Shear force Q = -43.78 kN/m

Overall check - WALL is SATISFACTORY

Verification No. 2

Forces acting on construction

Name	F_{hor} [kN/m]	App.Pt. Z [m]	F_{vert} [kN/m]	App.Pt. X [m]	Design coefficient
Weight - wall	0.00	-0.89	26.00	0.55	1.000
FF resistance	-55.45	-0.40	-17.97	0.18	1.000
Weight - earth wedge	0.00	-0.61	1.38	0.83	1.000
Active pressure	1.09	-0.05	0.36	1.10	1.350
Water pressure	7.20	-0.40	0.00	0.70	1.350
Uplift pressure	0.00	0.00	-6.00	0.73	1.350
Hasznos teher	0.32	-0.05	5.86	0.87	0.000

Verification of complete wall

Check for overturning stability
Resisting moment M_{res} = 6.84 kNm/m
Overturning moment M_{ovr} = -18.22 kNm/m

Safety factor = 1000.00 > 1.40
Wall for overturning is SATISFACTORY

Check for slip
Resisting horizontal force H_{res} = 0.91 kN/m
Active horizontal force H_{act} = -44.25 kN/m

Safety factor = 1000.00 > 1.10
Wall for slip is SATISFACTORY

Forces acting at the centre of footing bottom
Overall moment M = -24.07 kNm/m
Normal force N = 1.79 kN/m
Shear force Q = -44.25 kN/m

Overall check - WALL is SATISFACTORY

Bearing capacity of foundation soil

Forces acting at the centre of the footing bottom

Numbe	Moment [kNm/m]	Norm. force [kN/m]	Shear Force [kN/m]	Eccentricity [m]	Stress [kPa]
1	-26.82	10.59	-43.78	0.00	9.62
2	-24.07	1.79	-44.25	0.00	1.63

Bearing capacity of foundation soil check

Eccentricity verification
Max. eccentricity of normal force e = 0.0 mm
Maximum allowable eccentricity e_{alw} = 363.0 mm

Eccentricity of the normal force is SATISFACTORY

Footing bottom bearing capacity verification
Max. stress at footing bottom σ = 9.62 kPa
Bearing capacity of foundation soil R_d = 330.00 kPa

Safety factor = 34.29 > 1.40
Bearing capacity of foundation soil is SATISFACTORY

Overall verification - bearing capacity of found. soil is SATISFACTORY

Dimensioning No. 1

Forces acting on construction

Name	F_{hor} [kN/m]	App.Pt. Z [m]	F_{vert} [kN/m]	App.Pt. X [m]	Design coefficient
Weight - wall	0.00	-1.00	14.99	0.15	1.350
FF resistance	-24.60	-0.27	-7.99	0.00	1.000
Pressure at rest	18.26	-0.69	0.00	0.30	1.350
Water pressure	3.19	-0.27	0.00	0.30	1.350
Uplift pressure	0.00	0.00	-3.99	0.20	1.350
Hasznos teher	10.76	-1.00	0.00	0.30	1.500

Wall stem check

Reinforcement and dimensions of the cross-section
Bar diameter = 12.0 mm
Number of bars = 5
Reinforcement cover = 35.0 mm
Cross-section width = 1.00 m
Cross-section depth = 0.30 m

Reinforcement ratio ρ = 0.22 % > 0.15 % = ρ_{min}
Ultimate moment M_{Rd} = 62.17 kNm > 26.84 kNm = M_{Ed}

Cross-section is SATISFACTORY.

Dimensioning No. 2

Forces acting on construction

Name	F_{hor} [kN/m]	App.Pt. Z [m]	F_{vert} [kN/m]	App.Pt. X [m]	Design coefficient
Weight - wall	0.00	-0.89	26.00	0.55	1.350
FF resistance	-55.45	-0.40	-17.97	0.18	1.000
Weight - earth wedge	0.00	-0.61	1.38	0.83	1.350
Active pressure	1.09	-0.05	0.36	1.10	1.350
Water pressure	7.20	-0.40	0.00	0.70	1.350
Uplift pressure	0.00	0.00	-6.00	0.73	1.350
Hasznos teher	0.32	-0.05	5.86	0.87	1.500

Front wall jump check

Foundation thickness is greater than offset of the front wall jump. Reinforcement is not required.

Dimensioning No. 3

Forces acting on construction

Name	F_{hor} [kN/m]	App.Pt. Z [m]	F_{vert} [kN/m]	App.Pt. X [m]	Design coefficient
Weight - wall	0.00	-0.20	4.00	0.90	1.350
Weight - earth wedge	0.00	-0.61	1.38	0.83	1.350
Active pressure	1.09	-0.05	0.36	1.10	1.350
Hasznos teher	0.32	-0.05	5.86	0.87	1.500

Name	F_{hor} [kN/m]	App.Pt. Z [m]	F_{vert} [kN/m]	App.Pt. X [m]	Design coefficient
Contact tractions	0.00	0.00	0.00	0.70	0.000

Back wall jump check

Reinforcement and dimensions of the cross-section

Bar diameter = 12.0 mm
Number of bars = 5
Reinforcement cover = 35.0 mm
Cross-section width = 1.00 m
Cross-section depth = 0.40 m

Reinforcement ratio ρ = 0.16 % > 0.15 % = ρ_{min}
Ultimate moment M_{Rd} = 86.75 kNm > 3.27 kNm = M_{Ed}

Cross-section is SATISFACTORY.

SCHARER PLAN Kft.
H-1113 Budapest,
Bartók Béla út 152.
Telefon HU +36 (30) 258 5604

KELER STUDIO
1194 Budapest
Temesvár u. 13
www.kelerstudio.hu

Pomáz, HRSZ 3677/1
HÁSZ Kft.
Asztalosüzem és Irodaépület
Statikai dokumentáció – Alapozási szerkezetek
2017.10

Spread footing verification

Input data

Project F1 Alaptest
Date : 2017.09.07.

Basic soil parameters

No.	Name	Pattern	φ_{ef} [°]	c_{ef} [kPa]	γ [kN/m³]	γ_{su} [kN/m³]	δ [°]
1	Homokos iszap		26.50	12.00	18.00	8.00	
2	Iszap		25.00	90.00	19.00	11.00	
3	Iszapos homok		27.00	0.00	18.00	11.00	

All soils are considered as cohesionless for at rest pressure analysis.

Soil parameters

Homokos iszap

Unit weight :	γ	=	18,00 kN/m³
Angle of internal friction :	φ_{ef}	=	26,50 °
Cohesion of soil :	c_{ef}	=	12,00 kPa
Oedometric modulus :	E_{oed}	=	7,50 MPa
Saturated unit weight :	γ_{sat}	=	18,00 kN/m³

Iszap

Unit weight :	γ	=	19,00 kN/m³
Angle of internal friction :	φ_{ef}	=	25,00 °
Cohesion of soil :	c_{ef}	=	90,00 kPa
Oedometric modulus :	E_{oed}	=	22,00 MPa
Saturated unit weight :	γ_{sat}	=	21,00 kN/m³

Iszapos homok

Unit weight :	γ	=	18,00 kN/m³
Angle of internal friction :	φ_{ef}	=	27,00 °
Cohesion of soil :	c_{ef}	=	0,00 kPa
Oedometric modulus :	E_{oed}	=	22,00 MPa
Saturated unit weight :	γ_{sat}	=	21,00 kN/m³

Foundation

Foundation type: centric spread footing with steps

Depth from ground surface	h_z	=	1.75	m
Depth of footing bottom	d	=	1.45	m
Thickness of top step	t_v	=	0.85	m
Foundation thickness	t	=	0.40	m
Incl. of finished grade	s_1	=	0.00	°
Incl. of footing bottom	s_2	=	0.00	°

Unit weight of soil above foundation = 20.00 kN/m³

Geometry of structure

Foundation type: centric spread footing with steps

Spread footing length	x	=	2.00	m
Spread footing width	y	=	2.00	m
Length of top step	a_{vx}	=	1.00	m
Width of top step	a_{vy}	=	1.00	m
Column width in the direction of x	c_x	=	0.40	m
Column width in the direction of y	c_y	=	0.40	m
Spread footing volume		=	2.45	m^3

Material of structure

Unit weight γ = 25.00 kN/m^3
Analysis of concrete structures carried out according to the standard EN 1992 1-1 (EC2).

Concrete : C 30/37
Longitudinal steel : B500
Transverse steel: B500

Geological profile and assigned soils

No.	Layer [m]	Assigned soil	Pattern
1	1.00	Homokos iszap	
2	1.30	Iszap	
3	1.00	Iszapos homok	
4	-	Iszapos homok	

Load

No.	Load new	Load change	Name	Type	N [kN]	M_x [kNm]	M_y [kNm]	H_x [kN]	H_y [kN]
1	YES		Load No. 1	Design	329.09	0.95	12.27	-2.93	1.18
2	YES		Load No. 2	Design	167.12	118.32	87.97	-24.12	33.41
3	YES		Load No. 3	Design	169.28	98.78	101.79	-24.26	23.08
4	YES		Load No. 4	Design	169.28	98.78	101.79	-24.26	23.08
5	YES		Load No. 5	Design	169.28	136.70	101.24	-24.13	33.42
6	YES		Load No. 1 - service	Service	243.77	0.70	9.09	-2.17	0.87
7	YES		Load No. 2 - service	Service	123.79	87.64	65.16	-17.87	24.75
8	YES		Load No. 3 - service	Service	125.39	73.17	75.40	-17.97	17.10
9	YES		Load No. 4 - service	Service	125.39	73.17	75.40	-17.97	17.10
10	YES		Load No. 5 - service	Service	125.39	101.26	74.99	-17.87	24.76

Surface surcharges in the vicinity of footing

No.	Surcharge new	Surcharge change	Name	x_s [m]	y_s [m]	x [m]	y [m]	q [kPa]	α [°]	h [m]
1	YES		Surcharge No. 1	0.00	1.50	3.00	3.00	10.00	0.00	0.00

Ground water table

The ground water table is at a depth of 1.00 m from the original terrain.

Analysis settings

Type of analysis - Analysis for drained conditions
Analysis of vertical bearing capacity - EC 7-1 (EN 1997-1:2003)
Analysis of settlement - Analysis using oedometric modulus (CSN 73 1001)
Bounding of influence zone - by percentage of Sigma,Or
Coeff. of bounding of influence zone = 10.00 %
Analysis carried out according to classical theory (safety factor)

Factor of safety - vertical bearing capacity = 1.40
Factor of safety - horizontal bearing capacity = 1.10

Verification No. 1

Analysis carried out with automatic selection of the most unfavourable load cases.
Computed weight of spread footing G = 61.25 kN
Computed weight of overburden Z = 66.36 kN

Vertical bearing capacity check

Shape of contact stress : rectangle
Parameters of slip surface below foundation:
Depth of slip surface z_{sp} = 2.84 m
Length of slip surface l_{sp} = 8.14 m

Design bearing capacity of found.soil R_d = 816.70 kPa
Extreme contact pressure σ = 333.85 kPa

Factor of safety = 2.45 > 1.40
Bearing capacity in the vertical direction is SATISFACTORY

Horizontal bearing capacity check

Earth resistance: at rest
Design magnitude of earth resistance S_{pd} = 8.61 kN
Friction angle foundation-footing bottom ψ = 25.00 °
Cohesion foundation-footing bottom a = 90.00 kPa

Horizontal bearing capacity R_{dh} = 227.09 kN
Extreme horizontal force H = 41.22 kN

Factor of safety = 5.51 > 1.10
Bearing capacity in the horizontal direction is SATISFACTORY

Bearing capacity of foundation is SATISFACTORY

Verification No. 1

Settlement and rotation of foundation - input data

Analysis carried out with automatic selection of the most unfavourable load cases.
Analysis carried out with accounting for coefficient κ_1 (influence of foundation depth).
Stress at the footing bottom considered from the finished grade.

Computed weight of spread footing G = 61.25 kN
Computed weight of overburden Z = 66.36 kN

Settlement of mid point of edge x - 1 = 3.8 mm
Settlement of mid point of edge x - 2 = 3.0 mm
Settlement of mid point of edge y - 1 = 3.5 mm

Settlement of mid point of edge y - 2 = 3.1 mm
Settlement of foundation centre point = 5.1 mm
Settlement of characteristic point = 3.8 mm

(1-max.compressed edge; 2-min.compressed edge)

Settlement and rotation of foundation - results

Foundation stiffness:
Computed weighted average modulus of deformation E_{def} = 16.34 MPa
Foundation in the longitudinal direction is rigid (k=15.66)
Foundation in the direction of width is rigid (k=15.66)

Overall settlement and rotation of foundation:
Foundation settlement = 3.8 mm
Depth of influence zone = 3.80 m

Rotation in direction of x = 1.095 (tan*1000)
Rotation in direction of y = 2.708 (tan*1000)

Dimensioning No. 1

Analysis carried out with automatic selection of the most unfavourable load cases.

Verification of longitudinal reinforcement of foundation in the direction of x

Bar diameter = 12.0 mm
Number of bars = 10
Reinforcement cover = 50.0 mm
Cross-section width = 2.00 m
Cross-section depth = 0.40 m

Reinforcement ratio ρ = 0.16 % > 0.15 % = ρ_{min}
Ultimate moment M_{Rd} = 166.13 kNm > 65.53 kNm = M_{Ed}

Cross-section is SATISFACTORY.

Verification of longitudinal reinforcement of foundation in the direction of y

Bar diameter = 12.0 mm
Number of bars = 10
Reinforcement cover = 62.0 mm
Cross-section width = 2.00 m
Cross-section depth = 0.40 m

Reinforcement ratio ρ = 0.17 % > 0.15 % = ρ_{min}
Ultimate moment M_{Rd} = 160.23 kNm > 85.85 kNm = M_{Ed}

Cross-section is SATISFACTORY.

Spread footing for punching shear failure check

Column normal force = 0.00 kN
Force transmitted into found.soil = 0.00 kN
Force transmitted by shear strength of SRC = 0.00 kN

Maximum shear force V_{Ed} = 26.25 kN/m
Outline of critical cross-section u_{cr} = 5.60 m
Shear force transmitted by concrete $V_{Rd,c}$ = 171.03 kN/m

$V_{Ed} < V_{Rd,c}$ => Reinforcement is not required

Spread footing for punching shear is SATISFACTORY

Spread footing verification

Input data

Project F1-1 Alaptest
Date : 2017.09.07.

Basic soil parameters

No.	Name	Pattern	φ_{ef} [°]	c_{ef} [kPa]	γ [kN/m³]	γ_{su} [kN/m³]	δ [°]
1	Homokos iszap		26.50	12.00	18.00	8.00	
2	Iszap		25.00	90.00	19.00	11.00	
3	Iszapos homok		27.00	0.00	18.00	11.00	

All soils are considered as cohesionless for at rest pressure analysis.

Soil parameters

Homokos iszap

Unit weight :	γ	=	18,00 kN/m³
Angle of internal friction :	φ_{ef}	=	26,50 °
Cohesion of soil :	c_{ef}	=	12,00 kPa
Oedometric modulus :	E_{oed}	=	7,50 MPa
Saturated unit weight :	γ_{sat}	=	18,00 kN/m³

Iszap

Unit weight :	γ	=	19,00 kN/m³
Angle of internal friction :	φ_{ef}	=	25,00 °
Cohesion of soil :	c_{ef}	=	90,00 kPa
Oedometric modulus :	E_{oed}	=	22,00 MPa
Saturated unit weight :	γ_{sat}	=	21,00 kN/m³

Iszapos homok

Unit weight :	γ	=	18,00 kN/m³
Angle of internal friction :	φ_{ef}	=	27,00 °
Cohesion of soil :	c_{ef}	=	0,00 kPa
Oedometric modulus :	E_{oed}	=	22,00 MPa
Saturated unit weight :	γ_{sat}	=	21,00 kN/m³

Foundation

Foundation type: centric spread footing with steps

Depth from ground surface	h_z	=	2.75	m
Depth of footing bottom	d	=	2.45	m
Thickness of top step	t_v	=	0.85	m
Foundation thickness	t	=	0.40	m
Incl. of finished grade	s_1	=	0.00	°
Incl. of footing bottom	s_2	=	0.00	°

Unit weight of soil above foundation = 20.00 kN/m³

Geometry of structure

Foundation type: centric spread footing with steps

Spread footing length	x	=	2.00	m
Spread footing width	y	=	2.00	m
Length of top step	a_{vx}	=	1.00	m
Width of top step	a_{vy}	=	1.00	m
Column width in the direction of x	c_x	=	0.40	m
Column width in the direction of y	c_y	=	0.40	m
Spread footing volume		=	2.45	m^3

Material of structure

Unit weight γ = 25.00 kN/m^3
Analysis of concrete structures carried out according to the standard EN 1992 1-1 (EC2).

Concrete : C 30/37
Longitudinal steel : B500
Transverse steel: B500

Geological profile and assigned soils

No.	Layer [m]	Assigned soil	Pattern
1	1.00	Homokos iszap	
2	1.30	Iszap	
3	1.00	Iszapos homok	
4	-	Iszapos homok	

Load

No.	Load new	Load change	Name	Type	N [kN]	M_x [kNm]	M_y [kNm]	H_x [kN]	H_y [kN]
1	YES		Load No. 1	Design	216.00	0.72	0.56	-0.13	0.53
2	YES		Load No. 2	Design	129.97	143.41	67.33	-13.23	29.64
3	YES		Load No. 3	Design	129.97	143.41	67.33	-13.23	29.64
4	YES		Load No. 4	Design	129.97	143.41	67.33	-13.23	29.64
5	YES		Load No. 5	Design	129.97	143.41	67.33	-13.23	29.64
6	YES		Load No. 1 - service	Service	160.00	0.53	0.41	-0.10	0.39
7	YES		Load No. 2 - service	Service	96.27	106.23	49.87	-9.80	21.96
8	YES		Load No. 3 - service	Service	96.27	106.23	49.87	-9.80	21.96
9	YES		Load No. 4 - service	Service	96.27	106.23	49.87	-9.80	21.96
10	YES		Load No. 5 - service	Service	96.27	106.23	49.87	-9.80	21.96

Surface surcharges in the vicinity of footing

No.	Surcharge new	Surcharge change	Name	x_s [m]	y_s [m]	x [m]	y [m]	q [kPa]	α [°]	h [m]
1	YES		Surcharge No. 1	0.00	1.50	3.00	3.00	10.00	0.00	0.00

Ground water table

The ground water table is at a depth of 1.00 m from the original terrain.

Analysis settings

Type of analysis - Analysis for drained conditions
Analysis of vertical bearing capacity - EC 7-1 (EN 1997-1:2003)
Analysis of settlement - Analysis using oedometric modulus (CSN 73 1001)
Bounding of influence zone - by percentage of Sigma,Or
Coeff. of bounding of influence zone = 10.00 %
Analysis carried out according to classical theory (safety factor)

Factor of safety - vertical bearing capacity = 1.40
Factor of safety - horizontal bearing capacity = 1.10

Verification No. 1

Analysis carried out with automatic selection of the most unfavourable load cases.
Computed weight of spread footing G = 61.25 kN
Computed weight of overburden Z = 143.16 kN

Vertical bearing capacity check

Shape of contact stress : rectangle
Parameters of slip surface below foundation:
Depth of slip surface z_{sp} = 2.87 m
Length of slip surface l_{sp} = 8.28 m

Design bearing capacity of found.soil R_d = 495.01 kPa
Extreme contact pressure σ = 242.40 kPa

Factor of safety = 2.04 > 1.40
Bearing capacity in the vertical direction is SATISFACTORY

Horizontal bearing capacity check

Earth resistance: at rest
Design magnitude of earth resistance S_{pd} = 12.95 kN
Friction angle foundation-footing bottom ψ = 27.00 °
Cohesion foundation-footing bottom a = 0.00 kPa

Horizontal bearing capacity R_{dh} = 183.33 kN
Extreme horizontal force H = 32.46 kN

Factor of safety = 5.65 > 1.10
Bearing capacity in the horizontal direction is SATISFACTORY

Bearing capacity of foundation is SATISFACTORY

Verification No. 1

Settlement and rotation of foundation - input data

Analysis carried out with automatic selection of the most unfavourable load cases.
Analysis carried out with accounting for coefficient κ_1 (influence of foundation depth).
Stress at the footing bottom considered from the finished grade.

Computed weight of spread footing G = 61.25 kN
Computed weight of overburden Z = 143.16 kN

Tension was excluded during the analysis.
Dimensions of spread footing after excluding stretched edges:

Spread footing length (x) = 2.00 m
Spread footing width (y) = 1.67 m

Settlement of mid point of edge x - 1 = 4.3 mm
Settlement of mid point of edge x - 2 = -0.9 mm
Settlement of mid point of edge y - 1 = 2.9 mm
Settlement of mid point of edge y - 2 = 1.4 mm
Settlement of foundation centre point = 3.9 mm
Settlement of characteristic point = 3.3 mm

(1-max.compressed edge; 2-min.compressed edge)

Settlement and rotation of foundation - results

Foundation stiffness:
Computed weighted average modulus of deformation E_{def} = 16.34 MPa
Foundation in the longitudinal direction is rigid (k=15.66)
Foundation in the direction of width is rigid (k=15.66)

Overall settlement and rotation of foundation:
Foundation settlement = 3.3 mm
Depth of influence zone = 3.12 m

Rotation in direction of x = 0.735 (tan*1000)
Rotation in direction of y = 2.605 (tan*1000)

Dimensioning No. 1

Analysis carried out with automatic selection of the most unfavourable load cases.

Verification of longitudinal reinforcement of foundation in the direction of x

Bar diameter = 12.0 mm
Number of bars = 10
Reinforcement cover = 75.0 mm
Cross-section width = 2.00 m
Cross-section depth = 0.40 m

Reinforcement ratio ρ = 0.18 % > 0.15 % = ρ_{min}
Ultimate moment M_{Rd} = 153.84 kNm > 56.14 kNm = M_{Ed}

Cross-section is SATISFACTORY.

Verification of longitudinal reinforcement of foundation in the direction of y

Bar diameter = 12.0 mm
Number of bars = 10
Reinforcement cover = 87.0 mm
Cross-section width = 2.00 m
Cross-section depth = 0.40 m

Reinforcement ratio ρ = 0.18 % > 0.15 % = ρ_{min}
Ultimate moment M_{Rd} = 147.94 kNm > 86.25 kNm = M_{Ed}

Cross-section is SATISFACTORY.

Spread footing for punching shear failure check

Column normal force = 0.00 kN
Force transmitted into found.soil = 0.00 kN

Force transmitted by shear strength of SRC = 0.00 kN

Maximum shear force	V_{Ed}	=	25.92	kN/m
Outline of critical cross-section	u_{cr}	=	5.60	m
Shear force transmitted by concrete	$V_{Rd,c}$	=	171.03	kN/m

$V_{Ed} < V_{Rd,c}$ => Reinforcement is not required

Spread footing for punching shear is SATISFACTORY

Spread footing verification

Input data

Project F1 Alaptest - Előtetőnél
Date : 2017.09.07.

Basic soil parameters

No.	Name	Pattern	φ_{ef} [°]	c_{ef} [kPa]	γ [kN/m³]	γ_{su} [kN/m³]	δ [°]
1	Homokos iszap		26.50	12.00	18.00	8.00	
2	Iszap		25.00	90.00	19.00	11.00	
3	Iszapos homok		27.00	0.00	18.00	11.00	

All soils are considered as cohesionless for at rest pressure analysis.

Soil parameters

Homokos iszap

Unit weight :	γ	=	18,00 kN/m³
Angle of internal friction :	φ_{ef}	=	26,50 °
Cohesion of soil :	c_{ef}	=	12,00 kPa
Oedometric modulus :	E_{oed}	=	7,50 MPa
Saturated unit weight :	γ_{sat}	=	18,00 kN/m³

Iszap

Unit weight :	γ	=	19,00 kN/m³
Angle of internal friction :	φ_{ef}	=	25,00 °
Cohesion of soil :	c_{ef}	=	90,00 kPa
Oedometric modulus :	E_{oed}	=	22,00 MPa
Saturated unit weight :	γ_{sat}	=	21,00 kN/m³

Iszapos homok

Unit weight :	γ	=	18,00 kN/m³
Angle of internal friction :	φ_{ef}	=	27,00 °
Cohesion of soil :	c_{ef}	=	0,00 kPa
Oedometric modulus :	E_{oed}	=	22,00 MPa
Saturated unit weight :	γ_{sat}	=	21,00 kN/m³

Foundation

Foundation type: centric spread footing with steps

Depth from ground surface	h_z	=	1.75	m
Depth of footing bottom	d	=	1.45	m
Thickness of top step	t_v	=	0.85	m
Foundation thickness	t	=	0.40	m
Incl. of finished grade	s_1	=	0.00	°
Incl. of footing bottom	s_2	=	0.00	°

Unit weight of soil above foundation = 20.00 kN/m³

Geometry of structure

Foundation type: centric spread footing with steps

Spread footing length	x	=	2.00	m
Spread footing width	y	=	2.00	m
Length of top step	a_{vx}	=	1.00	m
Width of top step	a_{vy}	=	1.00	m
Column width in the direction of x	c_x	=	0.40	m
Column width in the direction of y	c_y	=	0.40	m
Spread footing volume		=	2.45	m^3

Material of structure

Unit weight γ = 25.00 kN/m^3
Analysis of concrete structures carried out according to the standard EN 1992 1-1 (EC2).

Concrete : C 30/37
Longitudinal steel : B500
Transverse steel: B500

Geological profile and assigned soils

No.	Layer [m]	Assigned soil	Pattern
1	1.00	Homokos iszap	
2	1.30	Iszap	
3	1.00	Iszapos homok	
4	-	Iszapos homok	

Load

No.	Load new	Load change	Name	Type	N [kN]	M_x [kNm]	M_y [kNm]	H_x [kN]	H_y [kN]
1	YES		Load No. 1	Design	373.09	5.64	-0.15	0.03	7.88
2	YES		Load No. 2	Design	181.09	142.77	-106.60	25.36	35.27
3	YES		Load No. 3	Design	181.09	104.89	-107.17	25.49	24.82
4	YES		Load No. 4	Design	181.09	142.11	-107.17	25.49	24.82
5	YES		Load No. 5	Design	181.90	142.77	106.60	25.36	35.27
6	YES		Load No. 1 - service	Service	276.36	4.18	-0.11	0.02	5.84
7	YES		Load No. 2 - service	Service	134.14	105.76	-78.96	18.79	26.13
8	YES		Load No. 3 - service	Service	134.14	77.70	-79.39	18.88	18.39
9	YES		Load No. 4 - service	Service	134.14	105.27	-79.39	18.88	18.39
10	YES		Load No. 5 - service	Service	134.74	105.76	78.96	18.79	26.13

Surface surcharges in the vicinity of footing

No.	Surcharge new	Surcharge change	Name	x_s [m]	y_s [m]	x [m]	y [m]	q [kPa]	α [°]	h [m]
1	YES		Surcharge No. 1	0.00	1.50	3.00	3.00	10.00	0.00	0.00

Ground water table

The ground water table is at a depth of 1.00 m from the original terrain.

Analysis settings

Type of analysis - Analysis for drained conditions
Analysis of vertical bearing capacity - EC 7-1 (EN 1997-1:2003)
Analysis of settlement - Analysis using oedometric modulus (CSN 73 1001)
Bounding of influence zone - by percentage of Sigma,Or
Coeff. of bounding of influence zone = 10.00 %
Analysis carried out according to classical theory (safety factor)

Factor of safety - vertical bearing capacity = 1.40
Factor of safety - horizontal bearing capacity = 1.10

Verification No. 1

Analysis carried out with automatic selection of the most unfavourable load cases.
Computed weight of spread footing G = 61.25 kN
Computed weight of overburden Z = 66.36 kN

Vertical bearing capacity check

Shape of contact stress : rectangle
Parameters of slip surface below foundation:
Depth of slip surface z_{sp} = 2.84 m
Length of slip surface l_{sp} = 8.14 m

Design bearing capacity of found.soil R_d = 815.30 kPa
Extreme contact pressure σ = 354.23 kPa

Factor of safety = 2.30 > 1.40
Bearing capacity in the vertical direction is SATISFACTORY

Horizontal bearing capacity check

Earth resistance: at rest
Design magnitude of earth resistance S_{pd} = 8.61 kN
Friction angle foundation-footing bottom ψ = 25.00 °
Cohesion foundation-footing bottom a = 90.00 kPa

Horizontal bearing capacity R_{dh} = 231.00 kN
Extreme horizontal force H = 43.44 kN

Factor of safety = 5.32 > 1.10
Bearing capacity in the horizontal direction is SATISFACTORY

Bearing capacity of foundation is SATISFACTORY

Verification No. 1

Settlement and rotation of foundation - input data

Analysis carried out with automatic selection of the most unfavourable load cases.
Analysis carried out with accounting for coefficient κ_1 (influence of foundation depth).
Stress at the footing bottom considered from the finished grade.

Computed weight of spread footing G = 61.25 kN
Computed weight of overburden Z = 66.36 kN

Settlement of mid point of edge x - 1 = 4.2 mm
Settlement of mid point of edge x - 2 = 3.2 mm
Settlement of mid point of edge y - 1 = 3.7 mm

Settlement of mid point of edge y - 2 = 3.7 mm
Settlement of foundation centre point = 5.6 mm
Settlement of characteristic point = 4.2 mm

(1-max.compressed edge; 2-min.compressed edge)

Settlement and rotation of foundation - results

Foundation stiffness:
Computed weighted average modulus of deformation E_{def} = 16.34 MPa
Foundation in the longitudinal direction is rigid (k=15.66)
Foundation in the direction of width is rigid (k=15.66)

Overall settlement and rotation of foundation:
Foundation settlement = 4.2 mm
Depth of influence zone = 3.96 m

Rotation in direction of x = 1.177 (tan*1000)
Rotation in direction of y = 2.226 (tan*1000)

Dimensioning No. 1

Analysis carried out for the load case No. 1.(Load No. 1)

Verification of longitudinal reinforcement of foundation in the direction of x

Bar diameter = 12.0 mm
Number of bars = 10
Reinforcement cover = 50.0 mm
Cross-section width = 2.00 m
Cross-section depth = 0.40 m

Reinforcement ratio ρ = 0.16 % > 0.15 % = ρ_{min}
Ultimate moment M_{Rd} = 166.13 kNm > 52.93 kNm = M_{Ed}

Cross-section is SATISFACTORY.

Verification of longitudinal reinforcement of foundation in the direction of y

Bar diameter = 12.0 mm
Number of bars = 10
Reinforcement cover = 62.0 mm
Cross-section width = 2.00 m
Cross-section depth = 0.40 m

Reinforcement ratio ρ = 0.17 % > 0.15 % = ρ_{min}
Ultimate moment M_{Rd} = 160.23 kNm > 56.73 kNm = M_{Ed}

Cross-section is SATISFACTORY.

Spread footing for punching shear failure check

Column normal force = 0.00 kN
Force transmitted into found.soil = 0.00 kN
Force transmitted by shear strength of SRC = 0.00 kN

Maximum shear force V_{Ed} = 12.66 kN/m
Outline of critical cross-section u_{cr} = 5.60 m
Shear force transmitted by concrete $V_{Rd,c}$ = 171.03 kN/m

$V_{Ed} < V_{Rd,c}$ => Reinforcement is not required

Spread footing for punching shear is SATISFACTORY

Spread footing verification

Input data

Project F2 Alaptest
Date : 2017.09.07.

Basic soil parameters

No.	Name	Pattern	φ_{ef} [°]	c_{ef} [kPa]	γ [kN/m³]	γ_{su} [kN/m³]	δ [°]
1	Homokos iszap		26.50	12.00	18.00	8.00	
2	Iszap		25.00	90.00	19.00	11.00	
3	Iszapos homok		27.00	0.00	18.00	11.00	

All soils are considered as cohesionless for at rest pressure analysis.

Soil parameters

Homokos iszap

Unit weight :	γ	=	18,00 kN/m³
Angle of internal friction :	φ_{ef}	=	26,50 °
Cohesion of soil :	c_{ef}	=	12,00 kPa
Oedometric modulus :	E_{oed}	=	7,50 MPa
Saturated unit weight :	γ_{sat}	=	18,00 kN/m³

Iszap

Unit weight :	γ	=	19,00 kN/m³
Angle of internal friction :	φ_{ef}	=	25,00 °
Cohesion of soil :	c_{ef}	=	90,00 kPa
Oedometric modulus :	E_{oed}	=	22,00 MPa
Saturated unit weight :	γ_{sat}	=	21,00 kN/m³

Iszapos homok

Unit weight :	γ	=	18,00 kN/m³
Angle of internal friction :	φ_{ef}	=	27,00 °
Cohesion of soil :	c_{ef}	=	0,00 kPa
Oedometric modulus :	E_{oed}	=	22,00 MPa
Saturated unit weight :	γ_{sat}	=	21,00 kN/m³

Foundation

Foundation type: centric spread footing with steps

Depth from ground surface	h_z	=	1.65	m
Depth of footing bottom	d	=	1.45	m
Thickness of top step	t_v	=	0.85	m
Foundation thickness	t	=	0.30	m
Incl. of finished grade	s_1	=	0.00	°
Incl. of footing bottom	s_2	=	0.00	°

Unit weight of soil above foundation = 20.00 kN/m³

Geometry of structure

Foundation type: centric spread footing with steps

Spread footing length	x	=	2.20	m
Spread footing width	y	=	1.80	m
Length of top step	a_{vx}	=	1.00	m
Width of top step	a_{vy}	=	1.00	m
Column width in the direction of x	c_x	=	0.40	m
Column width in the direction of y	c_y	=	0.40	m
Spread footing volume		=	2.04	m^3

Material of structure

Unit weight γ = 25.00 kN/m^3
Analysis of concrete structures carried out according to the standard EN 1992 1-1 (EC2).

Concrete : C 30/37
Longitudinal steel : B500
Transverse steel: B500

Geological profile and assigned soils

No.	Layer [m]	Assigned soil	Pattern
1	1.00	Homokos iszap	
2	1.30	Iszap	
3	1.00	Iszapos homok	
4	-	Iszapos homok	

Load

No.	Load new	Load change	Name	Type	N [kN]	M_x [kNm]	M_y [kNm]	H_x [kN]	H_y [kN]
1	YES		Load No. 1	Design	74.94	0.04	-31.79	11.69	0.01
2	YES		Load No. 2	Design	41.88	41.76	-65.15	15.08	10.05
3	YES		Load No. 3	Design	34.91	41.39	-100.94	24.47	9.84
4	YES		Load No. 4	Design	34.91	41.39	-100.94	24.47	9.84
5	YES		Load No. 5	Design	41.88	41.76	-65.15	15.08	10.05
6	YES		Load No. 1 - service	Service	55.51	0.03	-23.55	8.66	0.01
7	YES		Load No. 2 - service	Service	31.02	30.93	-48.26	11.17	7.44
8	YES		Load No. 3 - service	Service	25.86	30.66	-74.77	18.13	7.29
9	YES		Load No. 4 - service	Service	25.86	30.66	-74.77	18.13	7.29
10	YES		Load No. 5 - service	Service	31.02	30.93	-48.26	11.17	7.44

Surface surcharges in the vicinity of footing

No.	Surcharge new	Surcharge change	Name	x_s [m]	y_s [m]	x [m]	y [m]	q [kPa]	α [°]	h [m]
1	YES		Surcharge No. 1	1.50	1.25	3.00	2.50	10.00	0.00	0.00

Ground water table

The ground water table is at a depth of 1.00 m from the original terrain.

Analysis settings

Type of analysis - Analysis for drained conditions
Analysis of vertical bearing capacity - EC 7-1 (EN 1997-1:2003)
Analysis of settlement - Analysis using oedometric modulus (CSN 73 1001)
Bounding of influence zone - by percentage of Sigma,Or
Coeff. of bounding of influence zone = 10.00 %
Analysis carried out according to classical theory (safety factor)

Factor of safety - vertical bearing capacity = 1.40
Factor of safety - horizontal bearing capacity = 1.10

Verification No. 1

Analysis carried out with automatic selection of the most unfavourable load cases.
Computed weight of spread footing G = 50.95 kN
Computed weight of overburden Z = 73.12 kN

Vertical bearing capacity check

Shape of contact stress : rectangle
Parameters of slip surface below foundation:
Depth of slip surface z_{sp} = 2.55 m
Length of slip surface l_{sp} = 7.30 m

Design bearing capacity of found.soil R_d = 890.93 kPa
Extreme contact pressure σ = 242.70 kPa

Factor of safety = 3.67 > 1.40
Bearing capacity in the vertical direction is SATISFACTORY

Horizontal bearing capacity check

Earth resistance: at rest
Design magnitude of earth resistance S_{pd} = 6.20 kN
Friction angle foundation-footing bottom ψ = 25.00 °
Cohesion foundation-footing bottom a = 90.00 kPa

Horizontal bearing capacity R_{dh} = 139.29 kN
Extreme horizontal force H = 26.37 kN

Factor of safety = 5.28 > 1.10
Bearing capacity in the horizontal direction is SATISFACTORY

Bearing capacity of foundation is SATISFACTORY

Verification No. 1

Settlement and rotation of foundation - input data

Analysis carried out with automatic selection of the most unfavourable load cases.
Analysis carried out with accounting for coefficient κ_1 (influence of foundation depth).
Stress at the footing bottom considered from the finished grade.

Computed weight of spread footing G = 50.95 kN
Computed weight of overburden Z = 73.12 kN

Tension was excluded during the analysis.
Dimensions of spread footing after excluding stretched edges:

Spread footing length (x) = 1.39 m
Spread footing width (y) = 1.80 m

Settlement of mid point of edge x - 1 = 1.9 mm
Settlement of mid point of edge x - 2 = 0.6 mm
Settlement of mid point of edge y - 1 = 2.6 mm
Settlement of mid point of edge y - 2 = -1.5 mm
Settlement of foundation centre point = 2.3 mm
Settlement of characteristic point = 1.5 mm

(1-max.compressed edge; 2-min.compressed edge)

Settlement and rotation of foundation - results

Foundation stiffness:
Computed weighted average modulus of deformation E_{def} = 16.34 MPa
Foundation in the longitudinal direction is rigid (k=4.96)
Foundation in the direction of width is rigid (k=9.07)

Overall settlement and rotation of foundation:
Foundation settlement = 1.5 mm
Depth of influence zone = 2.40 m

Rotation in direction of x = 1.843 (tan*1000)
Rotation in direction of y = 0.920 (tan*1000)

Dimensioning No. 1

Analysis carried out with automatic selection of the most unfavourable load cases.

Verification of longitudinal reinforcement of foundation in the direction of x

Bar diameter = 12.0 mm
Number of bars = 9
Reinforcement cover = 50.0 mm
Cross-section width = 1.80 m
Cross-section depth = 0.30 m

Reinforcement ratio ρ = 0.23 % > 0.15 % = ρ_{min}
Ultimate moment M_{Rd} = 105.26 kNm > 73.54 kNm = M_{Ed}

Cross-section is SATISFACTORY.

Verification of longitudinal reinforcement of foundation in the direction of y

Bar diameter = 12.0 mm
Number of bars = 11
Reinforcement cover = 62.0 mm
Cross-section width = 2.20 m
Cross-section depth = 0.30 m

Reinforcement ratio ρ = 0.24 % > 0.15 % = ρ_{min}
Ultimate moment M_{Rd} = 122.16 kNm > 25.86 kNm = M_{Ed}

Cross-section is SATISFACTORY.

Spread footing for punching shear failure check

Column normal force = 0.00 kN
Force transmitted into found.soil = 0.00 kN

Force transmitted by shear strength of SRC = 0.00 kN

Maximum shear force	V_{Ed}	=	27.31	kN/m
Outline of critical cross-section	u_{cr}	=	5.20	m
Shear force transmitted by concrete	$V_{Rd,c}$	=	140.80	kN/m

$V_{Ed} < V_{Rd,c}$ => Reinforcement is not required

Spread footing for punching shear is SATISFACTORY